TAIWAN SEMICONDUCTOR
The Smartest Choice

SMAJ SERIES

400 Watts Suface Mount Transient Voltage Suppressor

SMA/DO-214AC

Features

- For surface mounted application
- Low profile package
- Built-in strain relief
- Glass passivated junction
- Excellent clamping capability
- Fast response time: Typically less than 1.0ps from 0 volt to BV min
- Typical I_R less than 1uA above 10V
- High temperature soldering guaranteed: 260℃ / 10 seconds at terminals
- Plastic material used carried Underwriters Laboratory Flammability Classification 94V-0
- 400 watts peak pulse power capability with a 10 / 1000 us waveform (300W above 78V)
- Green compound with suffix "G" on packing code & prefix "G" on datecode

AEC-Q101 Qualified

Pb-Free

RoHS COMPLIANT

Mechanical Data

- Case: Molded plastic
- Terminals: Pure tin plated, lead free
- Polarity: Indicated by cathode band
- Packaging: 12mm tape per EIA Std RS-481
- Weight: 0.064 gram

Ordering Information (example)

Part No.	Package	Packing	Packing code	Packing code (Green)
SMAJ5.0	SMA	1.8K / 7" REEL	R3	R3G

Maximum Ratings and Electrical Characteristics

Rating at 25 ℃ ambient temperature unless otherwise specified.

Type Number	Symbol	Value	Unit
Peak Power Dissipation at T_A=25℃, Tp=1ms(Note 1)	P_{PK}	400	Watts
Steady State Power Dissipation	P_D	1	Watts
Peak Forward Surge Current, 8.3ms Single Half Sine-wave Superimposed on Rated Load (JEDEC method) (Note 2)	I_{FSM}	40	Amps
Maximum Instantaneous Forward Voltage at 25.0A for Unidirectional Only	V_F	3.5	Volts
Operating and Storage Temperature Range	T_J, T_{STG}	-55 to +150	℃

Note 1: Non-repetitive Current Pulse Per Fig. 3 and Derated above T_A=25℃ Per Fig. 2

Note 2: Mounted on 5 x 5mm Copper Pads to Each Terminal

Devices for Bipolar Applications

1. For Bidrectional Use C or CA Suffix for Types SMAJ5.0 through Types SMAJ188
2. Electrical Characterstics Apply in Both Directions

RATINGS AND CHARACTERISTIC CURVES (SMAJ SERIES)

FIG. 1 PEAK PULSE POWER RATING CURVE

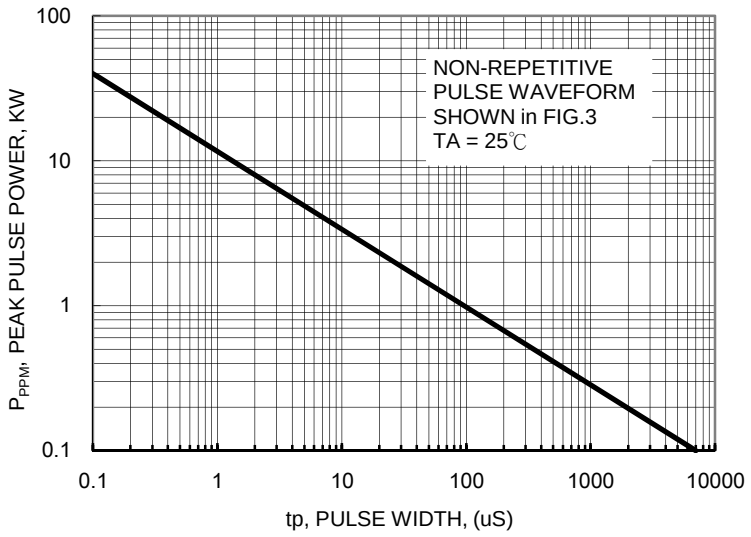

FIG.2 PULSE DERATING CURVE

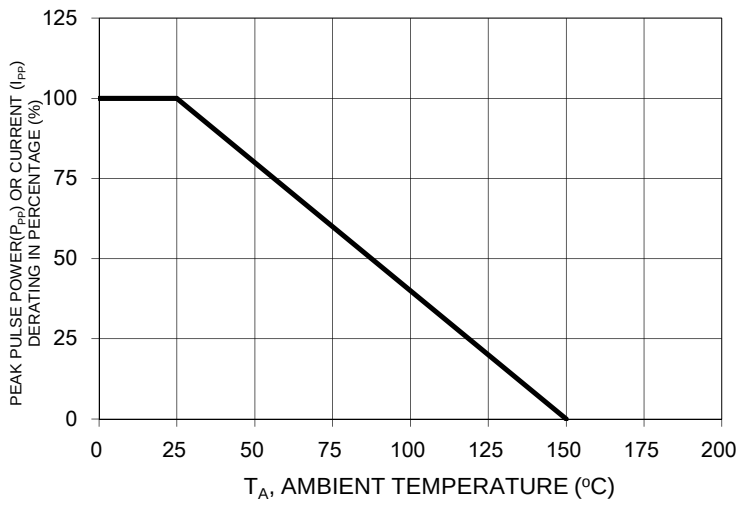

FIG. 3 CLAMPING POWER PULSE WAVEFORM

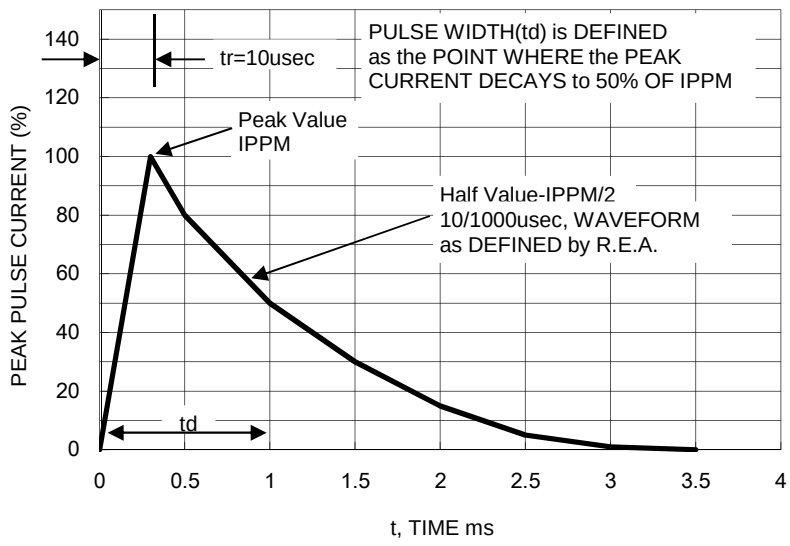

FIG. 4 MAXIMUM NON-REPETITIVE FORWARD SURGE CURRENT UNIDIRECTIONAL ONLY

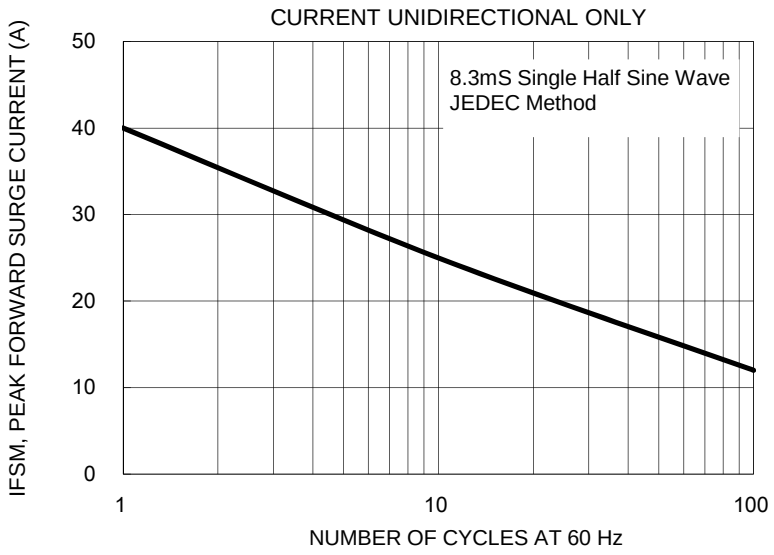

FIG. 5 TYPICAL JUNCTION CAPACITANCE

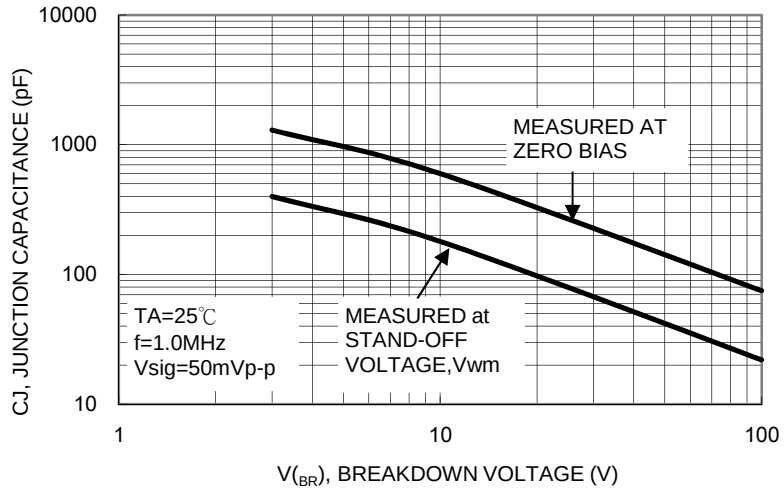

TAIWAN SEMICONDUCTOR
The Smartest Choice

ELECTRICAL CHARACTERISTICS (TA=25℃ unless otherwise noted)

Device	Device Marking Code	Working Peak Reverse Voltage V_{WM}	Breakdown Voltage VBR (V) at I_T		Test Current IT (mA)	Maximum Clamping Voltage at IPPM Vc(V) (Note5)	Maximum Peak Pulse Surge Current I_{PPM} (A)(Note5)	Maximum Reverse Leakage @ V_{WM} ID (uA)
			Min	Max				
SMAJ5.0	AD	5	6.4	7.3	10	9.6	41.7	800
SMAJ5.0A	AE	5	6.4	7	10	9.2	43.5	800
SMAJ6.0	AF	6	6.67	8.15	10	11.4	35.1	800
SMAJ6.0A	AG	6	6.67	7.37	10	10.3	38.8	800
SMAJ6.5	AH	6.5	7.22	8.82	10	12.3	32.5	500
SMAJ6.5A	AK	6.5	7.22	7.98	10	11.2	35.7	500
SMAJ7.0	AL	7	7.78	9.51	10	13.3	30.1	200
SMAJ7.0A	AM	7	7.78	8.6	10	12.0	33.3	200
SMAJ7.5	AN	7.5	8.33	10.30	1	14.3	28.0	100
SMAJ7.5A	AP	7.5	8.33	9.21	1	12.9	31.0	100
SMAJ8.0	AQ	8	8.89	10.9	1	15.0	26.7	50
SMAJ8.0A	AR	8	8.89	9.83	1	13.6	29.4	50
SMAJ8.5	AS	8.5	9.44	11.5	1	15.9	25.2	10
SMAJ8.5A	AT	8.5	9.44	10.4	1	14.4	27.8	10
SMAJ9.0	AU	9	10	12.2	1	16.9	23.7	5
SMAJ9.0A	AV	9	10	11.1	1	15.4	26.0	5
SMAJ10	AW	10	11.1	13.6	1	18.8	21.3	5
SMAJ10A	AX	10	11.1	12.3	1	17.0	23.5	5
SMAJ11	AY	11	12.2	14.9	1	20.1	19.9	1
SMAJ11A	AZ	11	12.2	13.5	1	18.2	22.0	1
SMAJ12	BD	12	13.3	16.3	1	22.0	18.2	1
SMAJ12A	BE	12	13.3	14.7	1	19.9	20.1	1
SMAJ13	BF	13	14.4	17.6	1	23.8	16.8	1
SMAJ13A	BG	13	14.4	15.9	1	21.5	18.6	1
SMAJ14	BH	14	15.6	19.1	1	25.8	15.5	1
SMAJ14A	BK	14	15.6	17.2	1	23.2	17.2	1
SMAJ15	BL	15	16.7	20.4	1	26.9	14.9	1
SMAJ15A	BM	15	16.7	18.5	1	24.4	16.4	1
SMAJ16	BN	16	17.8	21.8	1	28.8	13.9	1
SMAJ16A	BP	16	17.8	19.7	1	26.0	15.4	1
SMAJ17	BQ	17	18.9	23.1	1	30.5	13.1	1
SMAJ17A	BR	17	18.9	20.9	1	27.6	14.5	1
SMAJ18	BS	18	20	24.4	1	32.2	12.4	1
SMAJ18A	BT	18	20	22.1	1	29.2	13.7	1
SMAJ20	BU	20	22.2	27.1	1	35.8	11.2	1
SMAJ20A	BV	20	22.2	24.5	1	32.4	12.3	1
SMAJ22	BW	22	24.4	29.8	1	39.4	10.2	1
SMAJ22A	BX	22	24.4	26.9	1	35.5	11.3	1
SMAJ24	BY	24	26.7	32.6	1	43.0	9.3	1
SMAJ24A	BZ	24	26.7	29.5	1	38.9	10.3	1
SMAJ26	CD	26	28.9	35.3	1	46.6	8.6	1
SMAJ26A	CE	26	28.9	31.9	1	42.1	9.5	1
SMAJ28	CF	28	31.1	38	1	50.0	8.0	1
SMAJ28A	CG	28	31.1	34.4	1	45.4	8.8	1
SMAJ30	CH	30	33.3	40.7	1	53.5	7.5	1
SMAJ30A	CK	30	33.3	36.8	1	48.4	8.3	1
SMAJ33	CL	33	36.7	44.9	1	59.0	6.8	1
SMAJ33A	CM	33	36.7	40.6	1	53.3	7.5	1
SMAJ36	CN	36	40	48.9	1	64.3	6.2	1
SMAJ36A	CP	36	40	44.2	1	58.1	6.9	1

ELECTRICAL CHARACTERISTICS (TA=25℃ unless otherwise noted)

Device	Device Marking Code	Working Peak Reverse Voltage V_{WM}	Breakdown Voltage VBR (V) at I_T		Test Current IT (mA)	Maximum Clamping Voltage at IPPM Vc(V) (Note5)	Maximum Peak Pulse Surge Current I_{PPM} (A)(Note5)	Maximum Reverse Leakage @ V_{WM} ID (uA)
			Min	Max				
SMAJ40	CQ	40	44.4	54.3	1	71.4	5.6	1
SMAJ40A	CR	40	44.4	49.1	1	64.5	6.2	1
SMAJ43	CS	43	47.8	58.4	1	76.7	5.2	1
SMAJ43A	CT	43	47.8	52.8	1	69.4	5.8	1
SMAJ45	CU	45	50	61.1	1	80.3	5.0	1
SMAJ45A	CV	45	50	55.3	1	72.7	5.5	1
SMAJ48	CW	48	53.3	65.1	1	85.5	4.7	1
SMAJ48A	CX	48	53.3	58.9	1	77.4	5.2	1
SMAJ51	CY	51	56.7	69.3	1	91.1	4.4	1
SMAJ51A	CZ	51	56.7	62.7	1	82.4	4.9	1
SMAJ54	RD	54	60	73.3	1	96.3	4.2	1
SMAJ54A	RE	54	60	66.3	1	87.1	4.6	1
SMAJ58	RF	58	64.4	78.7	1	103	3.9	1
SMAJ58A	RG	58	64.4	71.2	1	93.6	4.3	1
SMAJ60	RH	60	66.7	81.5	1	107	3.7	1
SMAJ60A	RK	60	66.7	73.7	1	96.8	4.1	1
SMAJ64	RL	64	71.1	86.9	1	114	3.5	1
SMAJ64A	RM	64	71.1	78.6	1	103	3.9	1
SMAJ70	RN	70	77.8	95.1	1	125	3.2	1
SMAJ70A	RP	70	77.8	86	1	113	3.5	1
SMAJ75	RQ	75	83.3	102	1	134	3.0	1
SMAJ75A	RR	75	83.3	92.1	1	121	3.3	1
SMAJ78	RS	78	86.7	106	1	139	2.9	1
SMAJ78A	RT	78	86.7	95.8	1	126	3.2	1
SMAJ85	RU	85	94.4	115	1	151	2	1
SMAJ85A	RV	85	94.4	104	1	137	2.2	1
SMAJ90	RW	90	100	122	1	160	1.9	1
SMAJ90A	RX	90	100	111	1	146	2.1	1
SMAJ100	RY	100	111	136	1	179	1.7	1
SMAJ100A	RZ	100	111	123	1	162	1.9	1
SMAJ110	SD	110	122	149	1	196	1.6	1
SMAJ110A	SE	110	122	135	1	177	1.7	1
SMAJ120	SF	120	133	163	1	214	1.4	1
SMAJ120A	SG	120	133	147	1	193	1.6	1
SMAJ130	SH	130	144	176	1	231	1.3	1
SMAJ130A	SK	130	144	159	1	209	1.5	1
SMAJ150	SL	150	167	204	1	266	1.1	1
SMAJ150A	SM	150	167	185	1	243	1.3	1
SMAJ160	SN	160	178	218	1	287	1	1
SMAJ160A	SP	160	178	197	1	259	1.2	1
SMAJ170	SQ	170	189	231	1	304	1	1
SMAJ170A	SR	170	189	209	1	275	1.1	1
SMAJ188	ST	188	209	255	1	344	0.9	1
SMAJ188A	SS	188	209	231	1	328	0.91	1

Notes:

1. Non-repetitive current pulse, per Fig. 3 and derated above T_A=25℃ per Fig. 2
2. Mounted on 5 x 5mm copper pads to each terminal
3. Lead temperature at T_L=75℃
4. Measure on 8.3ms single half sine-wave duty cycle=4 pulses per minutes maximum
5. Peak pulse power waveform is 10/1000 us
6. For Bi-Directional devices having V_R of 10 volts and under, the I_R limit is double.

Ordering information

Part No.	Package	Packing	Packing code	Packing code (Green)
SMAJxx (Note)	SMA	1.8K / 7" REEL	R3	R3G
	SMA	7.5K / 13" REEL	R2	R2G
	SMA	7.5K / 13" Plastic REEL	M2	M2G
	Folded SMA	1.8K / 7" REEL	F3	F3G
	Folded SMA	7.5K / 13" REEL	F2	F2G
	Folded SMA	7.5K / 13" Plastic REEL	F4	F4G
	C SMA	1.8K / 7" REEL	E3	E3G
	C SMA	7.5K / 13" REEL	E2	E2G

Note: "x" is Device Code from "5.0" thru "188".

Tape & Reel specification

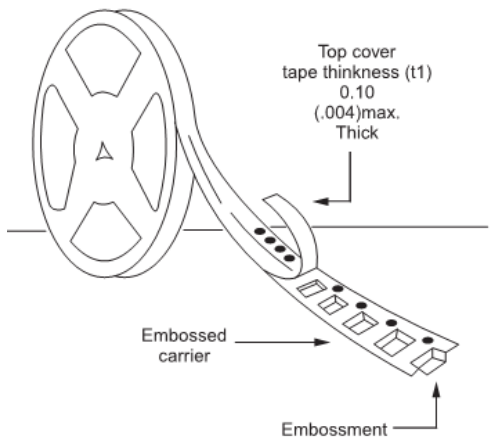

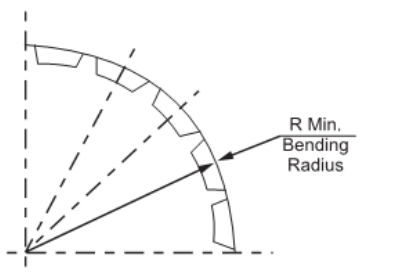

Tape with components shall pass around bending radius without damage, for reels with hub diameters approaching minimum dimension

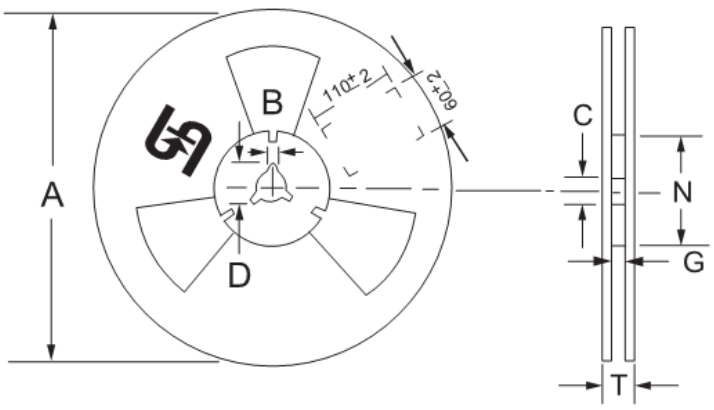

Reel Size	Tape Size	A	B	C	D	N	G	T
		±2.0	±0.4	+0.5;-0.2	min	±1.0	+0.8;-0	max
7"	12mm	178	1.9	13	21	62	12.2	14.6
Reel Size	Tape Size	A	B	C	D	N	G	T
		max	±0.5	±0.5	min	±0.5	+2.0;-0	max
13"	12mm	330	2	13	20.2	75	12.4	18.4

Unit (mm)

Suggested PAD Layout

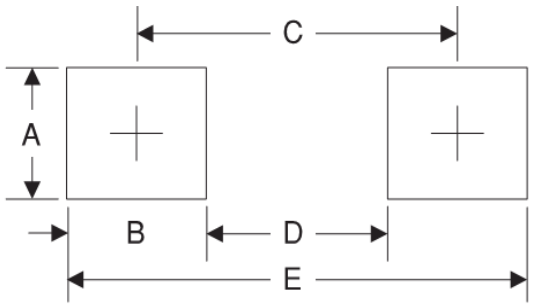

Symbol	Unit(mm)
A	1.78
B	1.51
C	3.92
D	2.41
E	4.43

Package Outline Dimensions

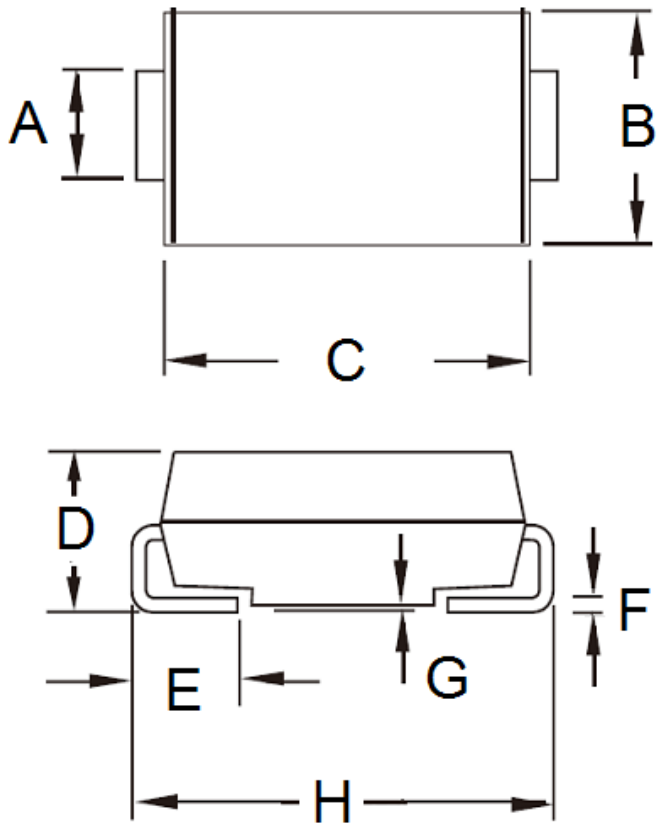

DIM.	Unit(mm)		Unit(inch)	
	Min	Max	Min	Max
A	1.27	1.58	0.050	0.062
B	2.29	2.83	0.090	0.111
C	4.06	4.60	0.160	0.181
D	1.99	2.50	0.078	0.098
E	0.90	1.41	0.035	0.056
F	0.15	0.31	0.006	0.012
G	0.10	0.20	0.004	0.008
H	4.95	5.33	0.195	0.210

Marking Diagram

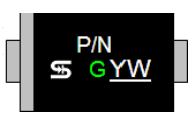

P/N = Specific Device Code
G = Green Compound
YW = Date Code

TVS APPLICATION NOTES:

Transient Voltage Suppressors may be used at various points in a circuit to provide various degrees of protection. The following is a typical linear power supply with transient voltage suppressor units plaved at different points. All provide protection

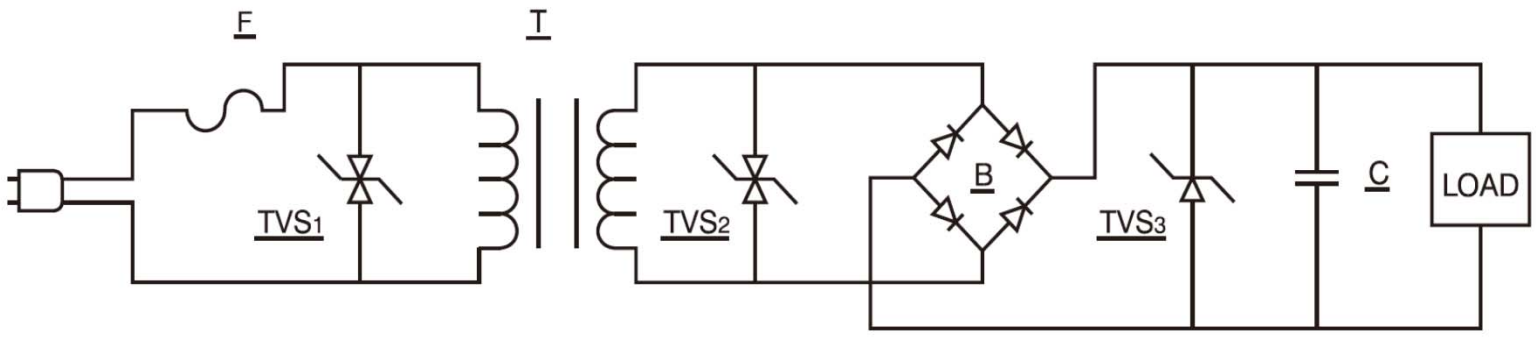

FIGURE 1

Transient Voltage Suppressor 1 provides maximum protection. However, the system will probably require replacement of the line fuse(F) since it provides a dominant portion of the series impedance when a surge is encountered.

Hower, we do not recommend to use the TVS diode here, unless we can know the electric circuit impedance and the magnitude of surge rushed into the circuit. Otherwise the TVS diode is easy to be destroyed by voltage surge.

Transient Voltage Suppressor 2 provides execllent protection of circuitry excluding the transformer(T). However, since the transformer is a large part of the series impedance, the chance of the line fuse opening during the surge condition is reduced.

Transient Voltage Suppressor 3 provides the load with complete protection. It uses a unidirectional Transient Voltage Suppressor, which is a cost advantage. The series impedance now includes the line fuse, transformer, and bridge rectifier(B) so failure

Any combination of this three, or any one of these applivations, will prevent damage to the load. This would require varying trade-offs in power supply protection versus maintenance(changing the time fuse).
An additional method is to utilize the Trans

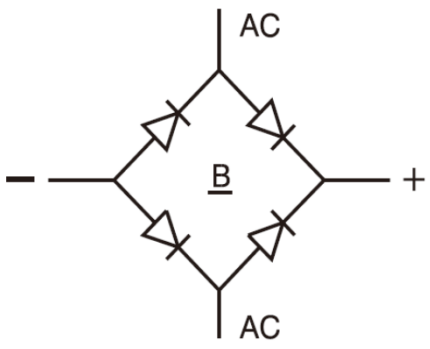

FIGURE 2