QM (1.78mm-.070") CONNECTORS-"MICRO 70"

General

Designed to fill the needs of high density and miniature interconnection, the QM series are Super-Small IDC Connection. This IDC plug uses I/O Cable <AWG # 30> with 0.89mm (.035") spacing. This new QM connector-design ensures RFI/EMI shielding protection. Available in 8, 14, 26, and 32 way.

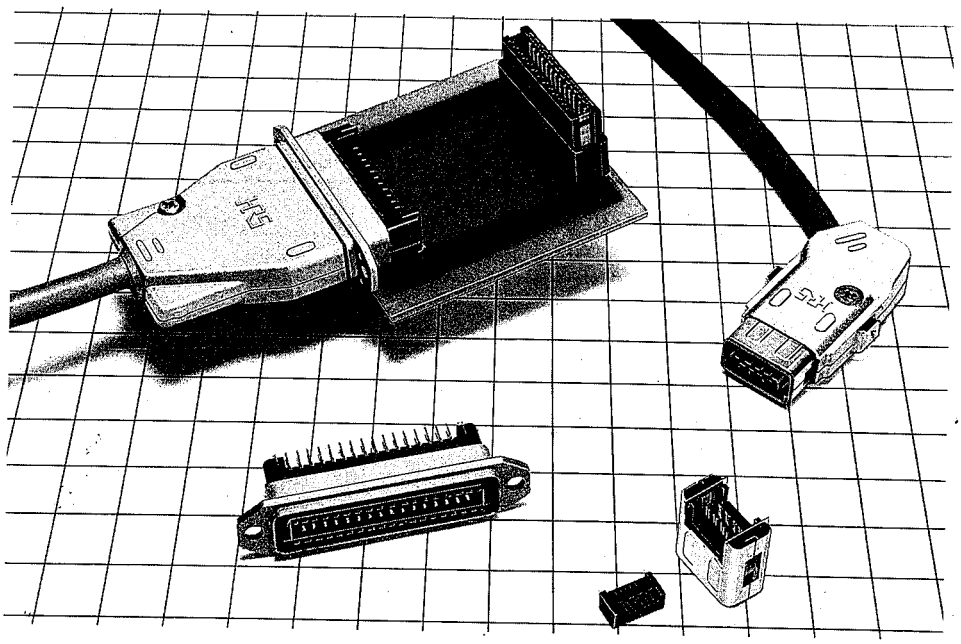

Features

(1) 1.78mm (.070") grid contact position enables high density designs.
(2) Ribbon construction of contacts provides excellent mechanical strength.
(3) Capable group IDC termination of 0.89 mm (.035") pitch cable ⟨AWG No.30⟩ to achieve labor saving in connection work.
(4) The connectors can be grounded to the PCB to isolate EMI/FRI generated from the cable and connector as well as latched to PCB.
(5) Zinc alloy die-cast shell and Metallic shell reduce the penetration of external EM noise.
(6) Hood type and with Lock mechanism type are available for Cover shell. One touch lock mechanism assures easy and quick connection.

Applications

Suitable for personal terminals, peripherals and terminals.

Specifications

Item	Specification
Current Rating	0.5A
Voltage	AC100V
Insulation Resistance	1000MΩ or more DC100V
Contact Resistance	35mΩ or less DC100mA
Withstanding Voltage	300V for 1 minute

Material and Finish

Item		Material	Finish
Hood		Zinc alloy die-cast	Silver finish
Insulation		PET Resin	Black
Contact	Pin	Beryllium copper	Selective gold plating
	Socket	Phosphor bronze	

Ordering Information

QM 10 — 14 R (L) — PR

(1) (2) (3) (4) (5) (6)

QM 30 — 14 P — EP

(1) (2) (3) (4) (6)

QM — 14 — CS

(1) (3) (6)

(1) Series Number: QM
(2) Serial sign for series
- 10: Right Angle P.C. Mount receptacle
- 20: Straight P.C. Mount receptacle
- 30: IDC Plug
- 40: Solder Type

(3) No. of Pin: 8, 14, 26 and 32 way
(4) Type of opening
- P: Plug (for Hood cover)
- PA: Plug (for cover with Lock mechanism)
- R: Receptacle

(5) Type of Snap Latch mounting
- Blank: Connector unit on a level with PCB. (see Fig 1)
- L: Protector on a level with PCB. (see Fig 2)

(6) Accessories
- CS: Cover case with Lock mechanism
- CV: Hood cover case
- CF: Hood
- PR: Protector
- CFI: Hood
- PR1: Protector (Without mounting hole)
- EP: Ground Plate
- SP: Stopper Plate

Fig 1

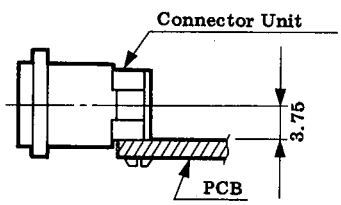

Fig 2

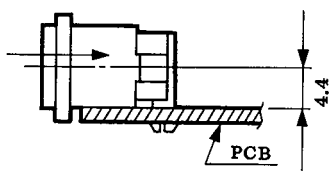

Plug Connector

1. Applicable Cable

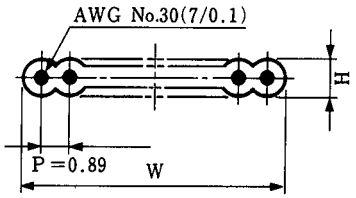

No. of Core	Size	Pitch	W	H
8	AWG No.30	0.89	7.12	0.7-0.75
14	AWG No.30	0.89	12.46	*When Vinyl Chloride is used as Insulator
26	AWG No.30	0.89	23.14	
32	AWG No.30	0.89	28.48	

2. I/O End Finish

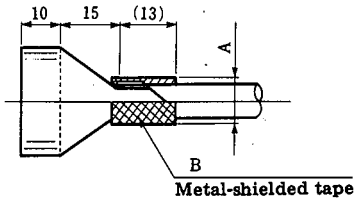

No. of Pin	A	B
8	4.8	After holding shield braid over cable sheath, wrap metal shielded tape up to about 1.5 circles.
14	5.5	
26	6.8	
32	7.3	

3. Tooling

No. of Pin	Part No.	Pressure Block	Guide Plate	Connecting Press
8	QM30-8P*	QM30-**PB	QM30-8GP	HIF Connecting Press
14	QM30-14P*		QM30-14GP	
26	QM30-26P*		QM30-26GP	
32	QM30-32P*		QM30-32GP	

4. How to install cover case

Please refer to next page.

5. Precaution for Cable End Finish

The cover case of QM series is made of zinc alloy die-cast which is effective for EMI shielding protection and the outside of cover case is coated with silver to provide excellent connection.

The shield structure for this QM series comprises 5 parts as per figure below, Therfore, I/O End Finish Treatment is essential for EMI shielding protection.

Grounding to PCB can be accomplished through the connection of plates provided on both sides of plug and receptacle.

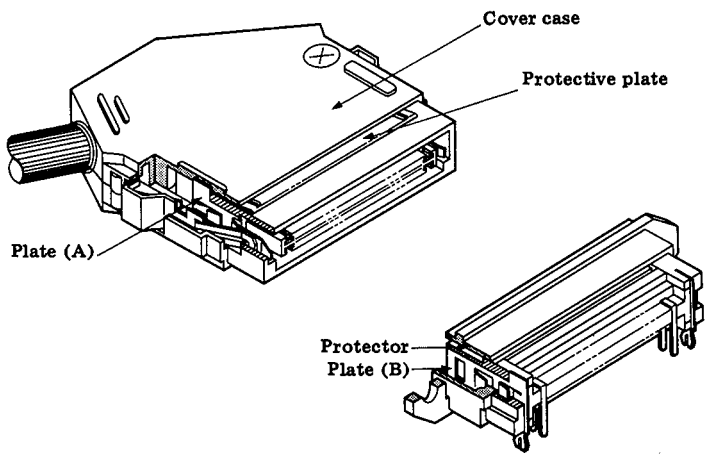

How To Install Cover Case-QM-※※-CS

(1) Use HIROSE Connecting tools, to perform IDC connection to Connector Unit (QM30–*PA–EP).

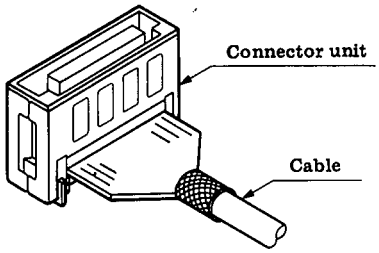

(2) Take out one side of the lock from the housing.
Bend the accompanying clamp into a bow shape and install it on the housing.

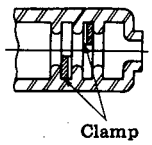

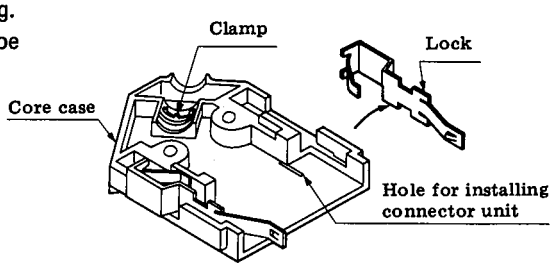

(3) Insert the lock plate into the slit at both sides of Connector Unit.

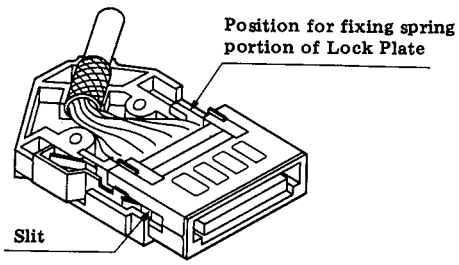

(4) Insert another lock plate as described above, and fix connector unit into the correct position in the cover case.

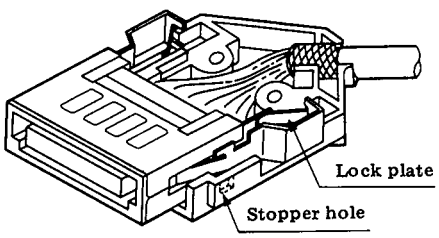

(5) Fix spring portion of lock plate into the correct position.

(6) Assemble it with attached screw (M25*0.45*6)
(When assembling the cover case, do it by pushing the lock button;
Connector unit to be completely installed)

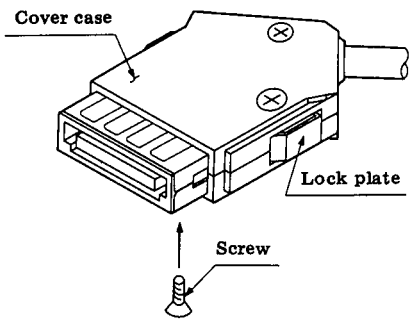

Caution: Be sure to install the cable, connector unit, and lock at the specified positions. Parts installed at improper positions will cause a gap in the housing joint and damage the connector unit.

QM40-※※P/QM40-※※PA (Solder Plug Connectors)

The solder connectors have been developed for use with thinner cables than the conventional specified cables.
The connectors are basically the same as the QM30. Design the harness by considering the following.

1 Solder wires quickly (15W·3sec) because the connector housings are made of PET resin (thermoplastic).
2 Be sure to make the diameter cables to the dimensions specified on Page 177.

Connector Setup View

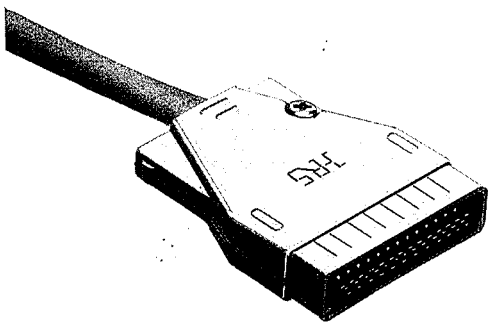

Cover case: QM—*—CV
Connector: QM30—*P—EP

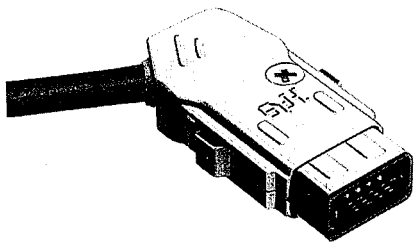

Cover case: QM—*—CS
Connector: QM30—*—PA—EP

P.C. Mount Receptacle Connector

1. PCB Layout (mm) Thickness of PCB: 1.6 mm.

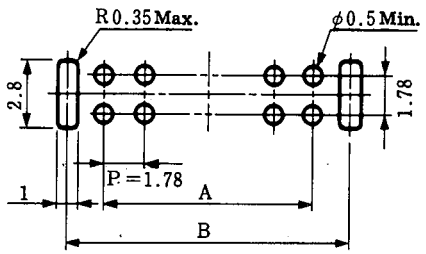

No. of Pin	Part No.	A	B
8	QM*-8R	5.34	9.62
14	QM*-14R	10.68	14.96
26	QM*-26R	21.36	25.64
32	QM*-32R	26.70	30.98

2. Mounting Style (mm)

A Type

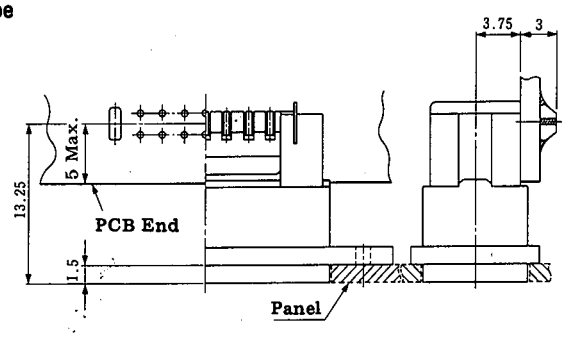

No. of Pin	Part No.
8	QM10-8R-PR
14	QM10-14R-PR
26	QM10-26R-PR
32	QM10-32R-PR

B Type

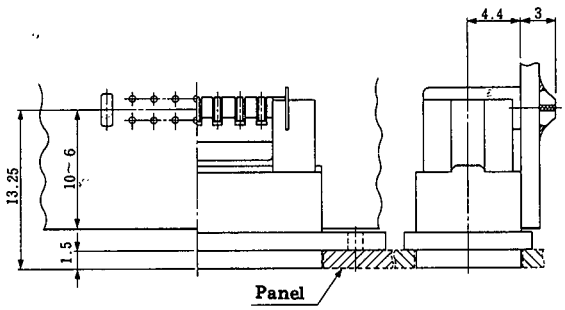

No. of Pin	Part No.
8	QM10-8R(L)-PR
14	QM10-14R(L)-PR
26	QM10-26R(L)-PR
32	QM10-32R(L)-PR

C Type

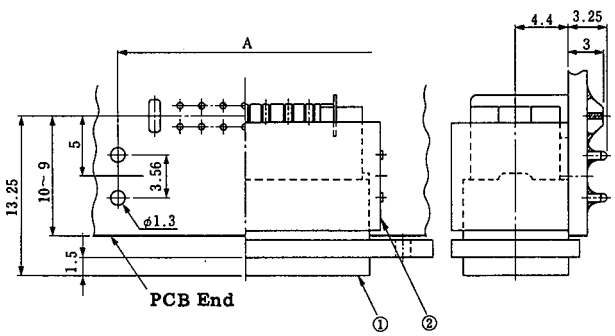

STOPPER PLATE assures strong holding force between connector and PCB against the external forces.

No.of Pin	Part No. ①	Part No. ②	A
8	QM10- 8R(L)-PR	QM- 8-SP1	16.00
14	QM10-14R(L)-PR	QM-14-SP1	21.34
26	QM10-26R(L)-PR	QM-26-SP1	32.02
32	QM10-32R(L)-PR	QM-32-SP	37.36

3. Panel Cutout (mm)

Thickness of Panel: Max. 1.6 mm

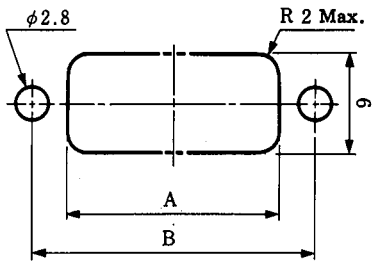

No.of Pin	Part No.	A	B
8	QM*-8R*-PR*	15.62	21.02
14	QM*-14R*-PR*	20.96	26.36
26	QM*-26R*-PR*	31.64	37.04
32	QM*-32R*-PR*	36.98	42.38

4. Precaution for selection of Cleaning Solvents

Insulation material is PET that has excellent chemical and heat resistance. As for Protector, please refer to table—1 below for selection of cleaning because of the coating treatment used.

Table—1

	Ultrasonic cleaning ※1	Vapor phase cleaning ※2
Alcohol	○	○
Trichlorotrifluoromethane	○	△
Chlorothene	○	△

※1: Ultrasonic cleaning : 10 minutes
※2: Vapor cleaning: 3 minutes
(Repeat of vapor and ultrasonic cleaning (30 sec)).

△; For thirty minutes to one hour after washing the connectors, handle PCBs on which the connectors are mounted with special care because the coating surface swells and can be easily flawed.

Plug Connector (for Cover Case with Lock Mechanism)

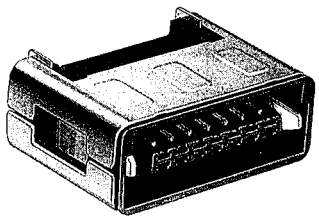

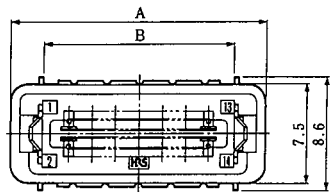

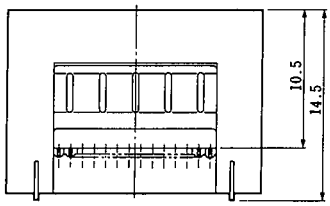

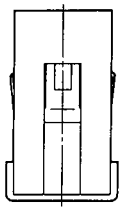

CL226-0062-7
QM30-14PA-EP

Unit: mm

HRS No.	No. of Pin	Part No.	A	B
CL226-0061-4	8	QM30- 8PA-EP	14.12	9.32
CL226-0062-7	14	QM30-14PA-EP	19.46	14.66
CL226-0063-0	26	QM30-26PA-EP	30.14	25.34
CL226-0064-2	32	QM30-32PA-EP	35.48	30.68

30° Cable Exit Cover Case with Lock Mechanism

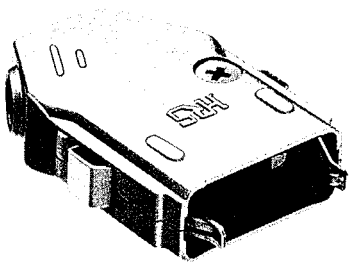

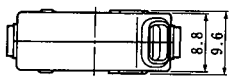

Cable Inlet

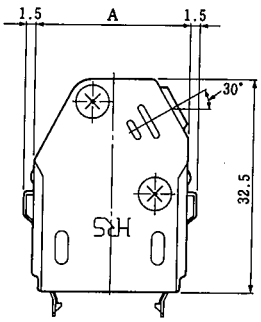

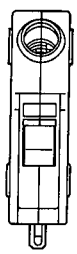

CL226-0058-0
QM-14-CS

Unit: mm

HRS No.	No. of Pin	Part No.	A	B
CL226-0057-7	8	QM- 8-CS	18.02	ϕ4.8
CL226-0058-0	14	QM-14-CS	23.36	ϕ5.5
CL226-0059-2	26	QM-26-CS	34.04	5.5 x 8.5
CL226-0060-1	32	QM-32-CS	39.38	5.5 x 9.5

Plug Connector (for Hood Cover Case)

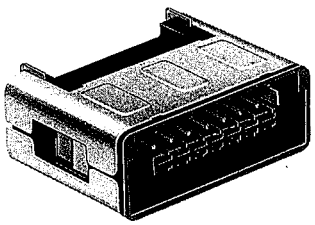

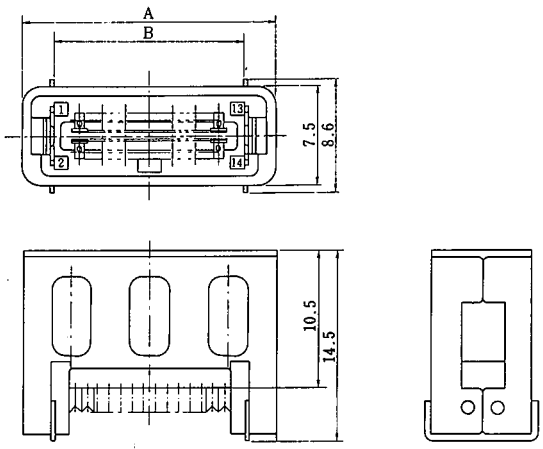

CL226-0009-4
QM30-14P-EP

Unit: mm

HRS No.	No. of Pin	Part No.	A	B
CL226-0039-5	8	QM30- 8P-EP	14.12	9.32
CL226-0009-4	14	QM30-14P-EP	19.46	14.66
CL226-0010-3	26	QM30-26P-EP	30.14	25.34

Hood Cover Case

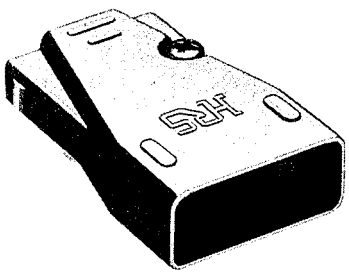

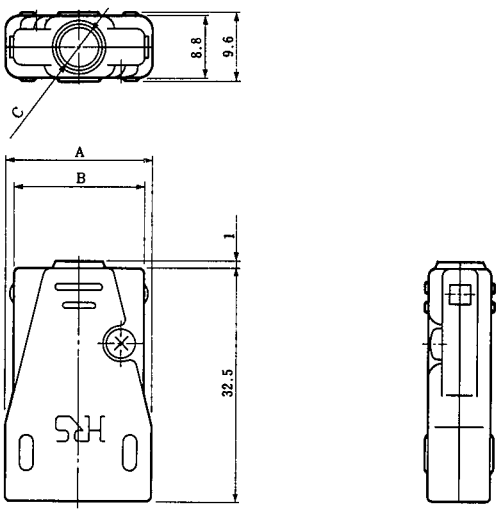

CL226-0011-6
QM-14-CV

Unit: mm

HRS No.	No. of Pin	Part No.	A	B	C
CL226-0040-4	8	QM- 8-CV	15.42	–	ϕ4.8
CL226-0011-6	14	QM-14-CV	20.76	18.5	ϕ5.5
CL226-0012-9	26	QM-26-CV	31.44	26.0	5.5 x 8.5

Solder Type (for Hood Cover Case)

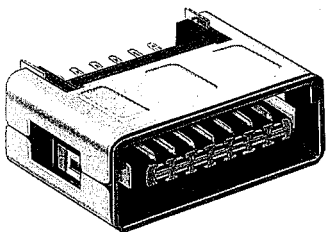

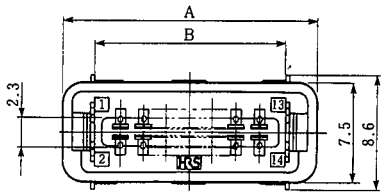

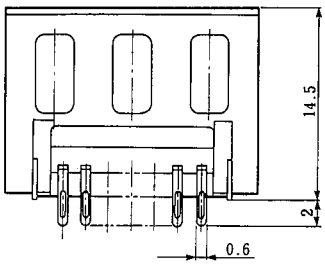

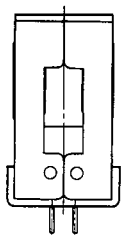

CL226-0078-7
QM40-14P-EP

Unit: mm

HRS No.	No. of Pin	Part No.	A	B
CL226-0072-0	8	QM40- 8P-EP	14.12	9.32
CL226-0078-7	14	QM40-14P-EP	19.46	14.66
CL226-0079-0	26	QM40-26P-EP	30.14	25.34

Solder Type (Cover Case with Lock Mechanism)

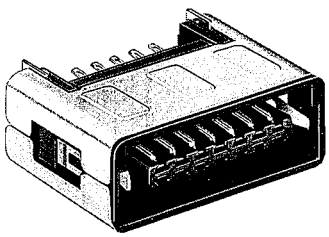

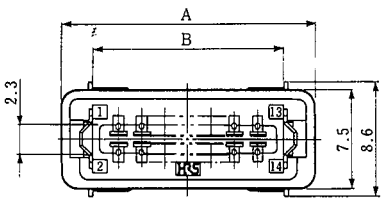

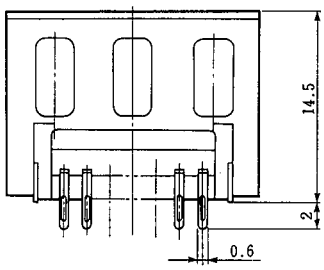

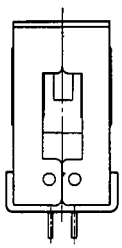

CL226-0076-1
QM40-14PA-EP

Unit: mm

HRS No.	No. of Pin	Part No.	A	B
CL226-0083-7	8	QM40- 8PA-EP	14.12	9.32
CL226-0076-1	14	QM40-14PA-EP	19.46	14.66
CL226-0080-9	26	QM40-26PA-EP	30.14	25.34
CL226-0092-8	32	QM40-32PA-EP	35.48	30.68

Receptacle with Protector (Right Angle P.C. Mount Type)

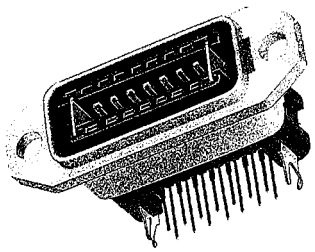

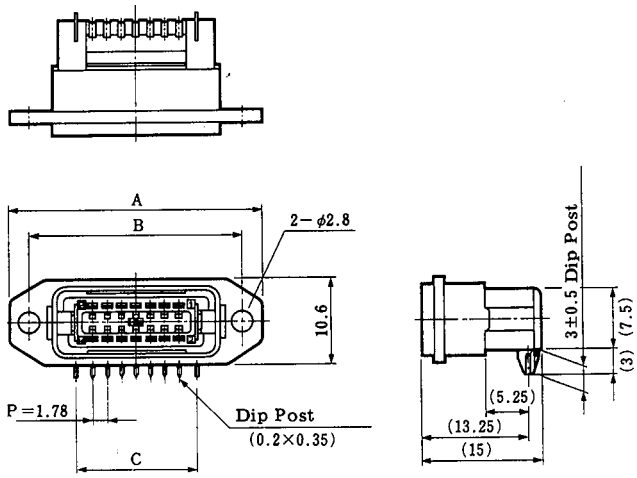

CL226-0015-7-02
QM10-14R-PR(02)

Unit:mm

HRS No.	No. of Pin	Part No.	A	B	C
CL226-0042-0-02	8	QM10-8R-PR(02)	26.02	21.02	9.62
CL226-0015-7-02	14	QM10-14R-PR(02)	31.36	26.36	14.96
CL226-0016-0-02	26	QM10-26R-PR(02)	42.04	37.04	25.64

Receptacle with Protector (Right Angle P.C. Mount (L) Type)

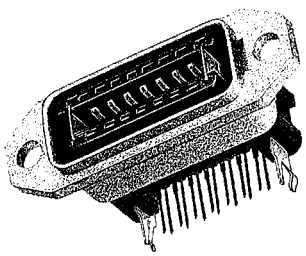

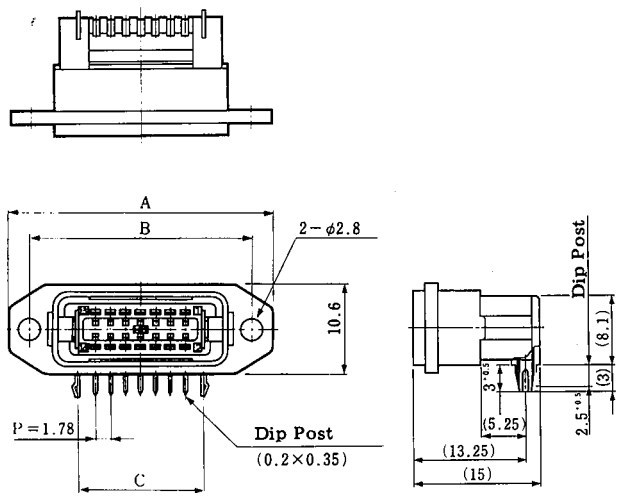

CL226-0019-8-02
QM10-14R(L)-PR(02)

Unit: mm

HRS No.	No. of Pin	Part No.	A	B	C
CL226-0044-5-02	8	QM10- 8R(L)-PR(02)	26.02	21.02	9.62
CL226-0019-8-02	14	QM10-14R(L)-PR(02)	31.36	26.36	14.96
CL226-0020-7-02	26	QM10-26R(L)-PR(02)	42.04	37.04	25.64
CL226-0033-9-02	32	QM10-32R(L)-PR(02)	47.38	42.38	30.98

Receptacle (without Mounting Hole) with Protector (Right Angle P.C. Mount Type)

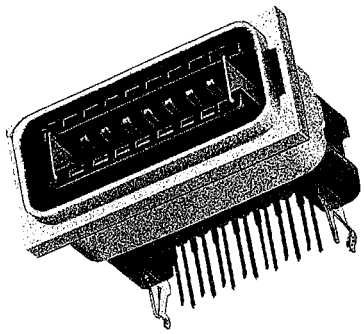

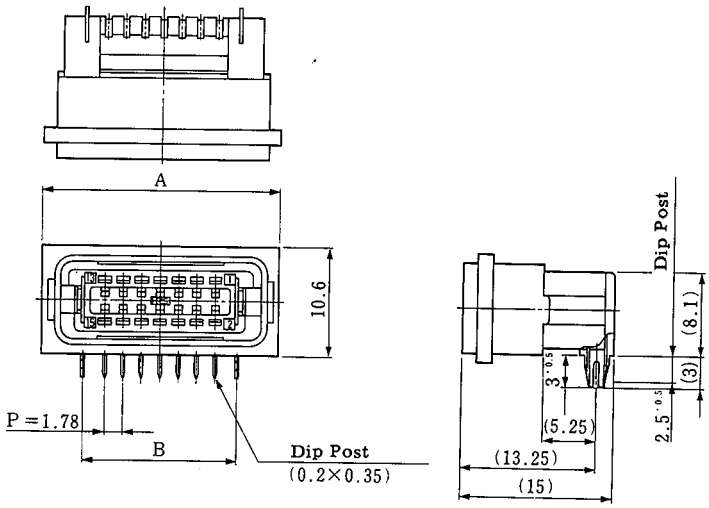

CL226-0023-5-02
QM10-14R(L)-PR1(02)

Unit: mm

HRS No.	No. of Pin	Part No.	A	B
CL226-0073-3-02	8	QM10- 8R(L)-PR1(02)	17.82	9.62
CL226-0023-5-02	14	QM10-14R(L)-PR1(02)	23.16	14.96
CL226-0024-8-02	26	QM10-26R(L)-PR1(02)	33.84	25.64
CL226-0053-6-02	32	QM10-32R(L)-PR1(02)	39.18	30.98

Receptacle with Protector (Straight Dip Type)

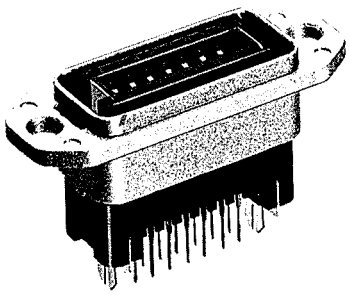

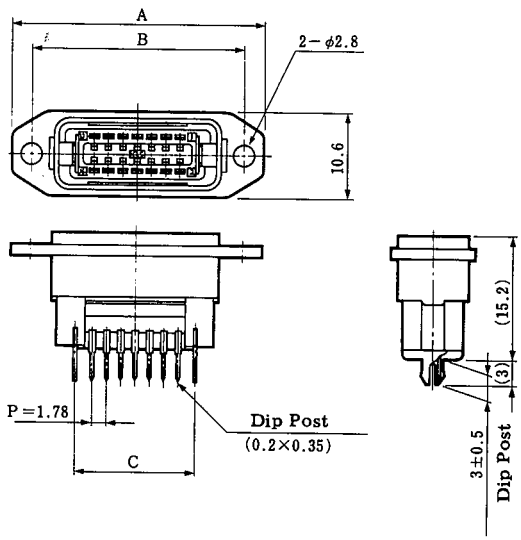

CL226-0017-2
QM20-14R-PR

Unit:mm

HRS No.	No.of Pin	Part No.	A	B	C
CL226-0017-2	14	QM20-14R-PR	31.36	26.36	14.96
CL226-0018-5	26	QM20-26R-PR	42.04	37.04	25.64
CL226-0032-6	32	QM20-32R-PR	47.38	42.38	30.98

Receptacle (without Mounting Hole) with Protector (Straight Dip Type)

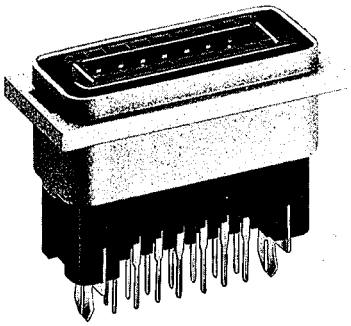

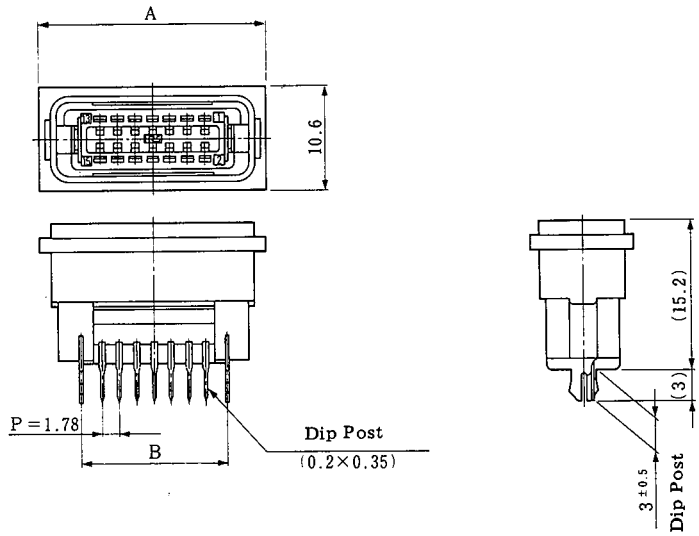

CL226-0054-9
QM20-14R-PR1

Unit:mm

HRS No.	No.of Pin	Part No.	A	B
CL226-0054-9	14	QM20-14R-RP1	23.16	14.96
CL226-0055-1	26	QM20-26R-RP1	33.84	25.64
CL226-0056-4	32	QM20-32R-RP1	39.18	30.98

Hood (QM-※※-CS)

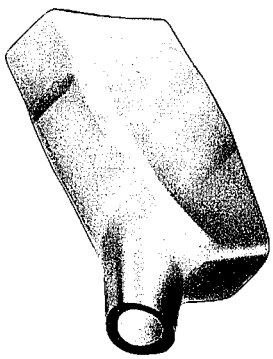

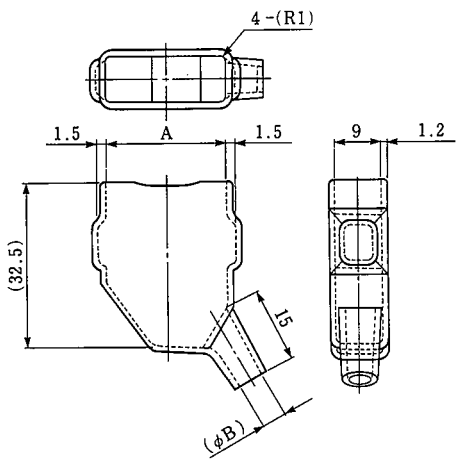

CL226-0086-5
QM-14-CF

Unit:mm

HRS No.	No.of Pin	Part No.	A	B
CL226-0086-5	14	QM-14-CF	23.4	5.5

Hood (QM-※※-CV)

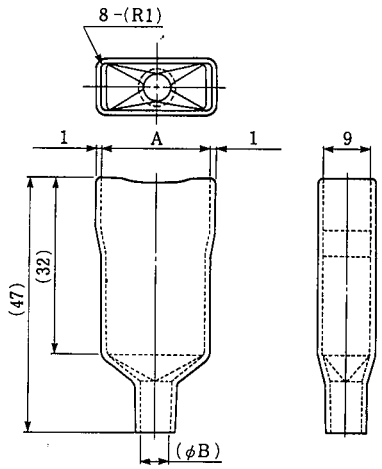

CL226-0093-0
QM-8-CF1

Unit:mm

HRS No.	No. of Pin	Part No.	A	B
CL226-0093-0	8	QM-8-CF1	15.4	4.8
CL226-0091-5	14	QM-14-CF1	21	5.5

Stopper Plate

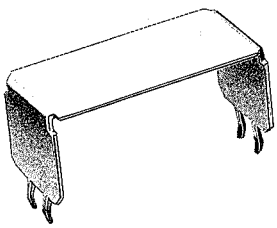

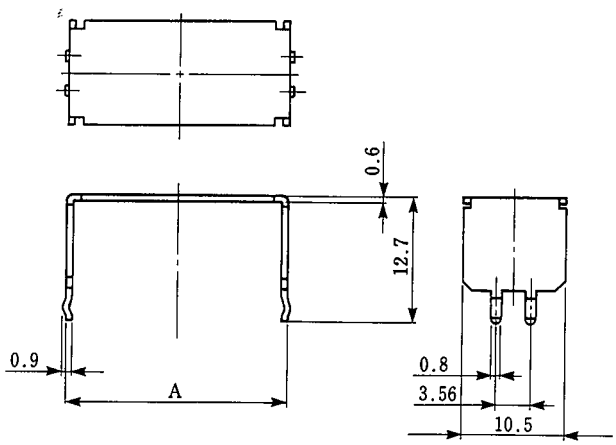

CL226-0101-7
QM-14-SP1

Unit: mm

HRS No.	No. of Pin	Part No.	A
CL226-0065-5	8	QM- 8-SP	17.18
CL226-0100-4		QM- 8-SP1	
CL226-0021-0	14	QM-14-SP	22.52
CL226-0101-7		QM-14-SP	
CL226-0022-2	26	QM-26-SP	33.20
CL226-0103-2		QM-26-SP1	
CL226-0066-8	32	QM-32-SP	38.54