Microsemi
SCOTTSDALE DIVISION

1N957B, -1 thru 1N992B, -1 DO-35

Silicon 500 mW Zener Diodes

ALSO AVAILABLE IN SURFACE MOUNT

DESCRIPTION

The popular 1N957B thru 1N992B series of 0.5 watt Zener Voltage Regulators provides a selection from 6.8 to 200 volts in standard 5% or 10% tolerances as well as tighter tolerances identified by different suffix letters on the part number. These glass axial-leaded DO-35 Zeners are also available with an internal-metallurgical-bond option by adding a "-1" suffix. The 1N962B-1 thru 1N992B-1 are available in JAN, JANTX, and JANTXV military qualifications. Microsemi also offers numerous other Zener products to meet higher and lower power applications.

IMPORTANT: For the most current data, consult *MICROSEMI's* website: http://www.microsemi.com

APPEARANCE

DO-35
(DO-204AH)

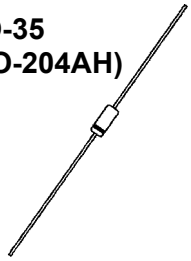

FEATURES

- JEDEC registered 1N957B(-1) to 1N992B(-1) series
- Internal metallurgical bond option available by adding a "-1" suffix
- Also available in JAN, JANTX, and JANTXV qualifications per MIL-PRF-19500/117 by adding the JAN, JANTX, or JANTXV prefixes to part numbers for desired level of screening as well as "-1" suffix; (e.g. JANTX1N962B-1, JANTXV1N986C-1, etc.)
- Military Surface Mount equivalents also available in DO-213AA by adding a UR-1 suffix in addition to the JAN, JANTX, and JANTXV prefix; e.g. JANTX1N962BUR-1 (see separate data sheet)
- Commercial Surface Mount equivalents available as MLL957B to MLL992B or with "-1" suffix for bonded in the DO-213AA MELF style package (consult factory for others)
- DO-7 glass body axial-leaded Zener equivalents are also available

APPLICATIONS / BENEFITS

- Regulates voltage over a broad operating current and temperature range
- Extensive selection from 6.8 to 200 V
- Standard voltage tolerances are plus/minus 5% with B suffix, 10 % with A suffix identification
- Tight tolerances available in plus or minus 2% or 1% with C or D suffix respectively
- Flexible axial-lead mounting terminals
- Nonsensitive to ESD per MIL-STD-750 Method 1020
- Minimal capacitance (see Figure 3)
- Inherently radiation hard as described in Microsemi MicroNote 050

MAXIMUM RATINGS

- Operating and Storage temperature: -65°C to +175°C
- Thermal Resistance: 250°C/W junction to lead at 3/8 (10 mm) lead length from body, or 310°C/W junction to ambient when mounted on FR4 PC board (1 oz Cu) with 4 mm^2 copper pads and track width 1 mm, length 25 mm
- Steady-State Power: 0.5 watts at $T_L \leq 50°C$ 3/8 inch (10 mm) from body or 0.48 W at $T_A \leq 25°C$ when mounted on FR4 PC board as described for thermal resistance above (also see Figure1)
- Forward voltage @200 mA: 1.1 volts (maximum) for 1N957B – 1N985B and 1.3 V for 1N985 – 1N992B
- Solder Temperatures: 260°C for 10 s (max)

MECHANICAL AND PACKAGING

- CASE: Hermetically sealed axial-lead glass DO-35 (DO-204AH) package
- TERMINALS: Leads, tin-lead plated solderable per MIL-STD-750, method 2026
- POLARITY: Cathode indicated by band. Diode to be operated with the banded end positive with respect to the opposite end for Zener regulation
- MARKING: Part number
- TAPE & REEL option: Standard per EIA-296 (add "TR" suffix to part number)
- WEIGHT: 0.2 grams
- See package dimensions on last page

Copyright © 2003

Microsemi
Scottsdale Division
8700 E. Thomas Rd. PO Box 1390, Scottsdale, AZ 85252 USA, (480) 941-6300, Fax: (480) 947-1503

ELECTRICAL CHARACTERISTICS* @ 25°C

JEDEC TYPE NUMBER (Note 1)	NOMINAL ZENER VOLTAGE (Note 2) V_Z	ZENER TEST CURRENT I_{ZT}	MAX. ZENER IMPEDANCE (Note 3) Z_{ZT} @ I_{ZT}	Z_{ZK} @ I_{ZK}		MAX. DC ZENER CURRENT (Note 4) I_{ZM}	MAX. SURGE CURRENT (Note 5) I_{ZSM}	MAX. REVERSE LEAKAGE CURRENT I_R @ V_R		MAX. TEMP. COEFFICIENT α_{VZ}
	VOLTS	mA	OHMS	OHMS	mA	mA	mA	µA	VOLTS	%/°C
1N957B	6.8	18.5	4.5	700	1.0	55	300	150	5.2	+0.05
1N958B	7.5	16.5	5.5	700	.5	50	275	75	5.7	+0.058
1N959B	8.2	15.0	6.5	700	.5	45	250	50	6.2	+0.065
1N960B	9.1	14.0	7.5	700	.5	41	225	25	6.9	+0.068
1N961B	10	12.5	8.5	700	.25	38	200	10	7.6	+0.075
1N962B	11	11.5	9.5	700	.25	32	175	5	8.4	+0.076
1N963B	12	10.5	11.5	700	.25	31	160	5	9.1	+0.077
1N964B	13	9.5	13.0	700	.25	28	150	5	9.9	+0.079
1N965B	15	8.5	16	700	.25	25	130	5	11.4	+0.082
1N966B	16	7.8	17	700	.25	24	120	5	12.2	+0.083
1N967B	18	7.0	21	750	.25	20	110	5	13.7	+0.085
1N968B	20	6.2	25	750	.25	18	100	5	15.2	+0.086
1N969B	22	5.6	29	750	.25	16	90	5	16.7	+0.087
1N970B	24	5.2	33	750	.25	15	80	5	18.2	+0.088
1N971B	27	4.6	41	750	.25	13	70	5	20.6	+0.090
1N972B	30	4.2	49	1000	.25	12	65	5	22.8	+0.091
1N973B	33	3.8	58	1000	.25	11	60	5	25.1	+0.092
1N974B	36	3.4	70	1000	.25	10	55	5	27.4	+0.093
1N975B	39	3.2	80	1000	.25	9.5	46	5	29.7	+0.094
1N976B	43	3.0	93	1500	.25	8.8	44	5	32.7	+0.095
1N977B	47	2.7	105	1500	.25	7.9	40	5	35.8	+0.095
1N978B	51	2.5	125	1500	.25	7.4	37	5	38.8	+0.096
1N979B	56	2.2	150	2000	.25	6.8	35	5	42.6	+0.096
1N980B	62	2.0	185	2000	.25	6.0	30	5	47.1	+0.097
1N981B	68	1.8	230	2000	.25	5.5	28	5	51.7	+0.097
1N982B	75	1.7	270	2000	.25	5.0	26	5	56.0	+0.098
1N983B	82	1.5	330	3000	.25	4.6	23	5	62.2	+0.098
1N984B	91	1.4	400	3000	.25	4.1	21	5	69.2	+0.099
1N985B	100	1.3	500	3000	.25	3.7	18	5	76.0	+0.11
1N986B	110	1.1	750	4000	.25	3.3	16	5	83.6	+0.11
1N987B	120	1.0	900	4500	.25	3.1	15	5	91.2	+0.11
1N988B	130	0.95	1100	5000	.25	2.7	13	5	98.8	+0.11
1N989B	150	0.85	1500	6000	.25	2.4	12	5	114.0	+0.11
1N990B	160	0.80	1700	6500	.25	2.2	11	5	121.6	+0.11
1N991B	180	0.68	2200	7100	.25	2.0	10	5	136.8	+0.11
1N992B	200	0.65	2500	8000	.25	1.8	9	5	152.0	+0.11

* JEDEC Registered Data

NOTE 1: The JEDEC type numbers shown (B suffix) have a +/-5% tolerance on nominal Zener voltage. The suffix A is used to identify +/-10% tolerance; suffix C is used to identify +/-2%; and suffix D is used to identify +/-1% tolerance; no suffix indicates +/-20% tolerance.

NOTE 2: Zener voltage (V_Z) is measured after the test current has been applied for 20 +/- 5 seconds. The device shall be suspended by its leads with the inside edge of the mounting clips between .375" and .500" from the body. Mounting clips shall be maintained at a temperature of 25 +8/ -2°C.

NOTE 3: The zener impedance is derived when a 60 cycle ac current having an rms value equal to 10% of the dc zener current (I_{ZT} or I_{ZK}) is superimposed on I_{ZT} or I_{ZK}. Zener impedance is measured at 2 points to ensure a sharp knee on the breakdown curve and to eliminate unstable units. See MicroNote 202 for variation in dynamic impedance with different zener currents.

NOTE 4: The values of I_{ZM} are calculated for a +/- 5% tolerance on nominal zener voltage. Allowance has been made for the rise in zener voltage above V_{ZT} which results from zener impedance and the increase in junction temperature as power dissipation approaches 400 mW. In the case of individual diodes I_{ZM} is that value of current which results in a dissipation of 400 mW at 75°C lead temperature at 3/8" from body.

NOTE 5: The surge for I_{ZSM} is a square wave or equivalent half-sine wave pulse of 1/120 sec. duration.

Copyright © 2003

GRAPHS

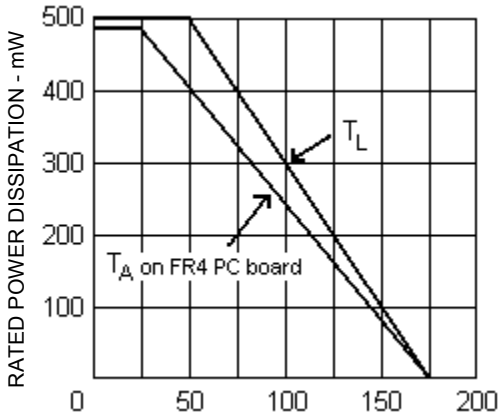

T_L – LEAD TEMPERATURE (°C) 3/8" FROM BODY or T_A on FR4 PC BOARD

FIGURE 1
POWER DERATING CURVE

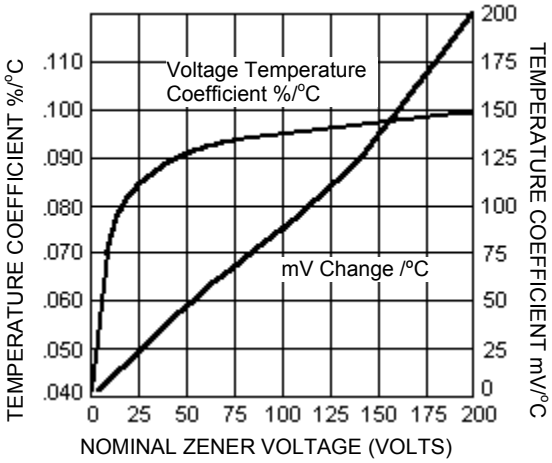

FIGURE 2
ZENER VOLTAGE TEMPERATURE COEFFICIENT vs. ZENER VOLTAGE

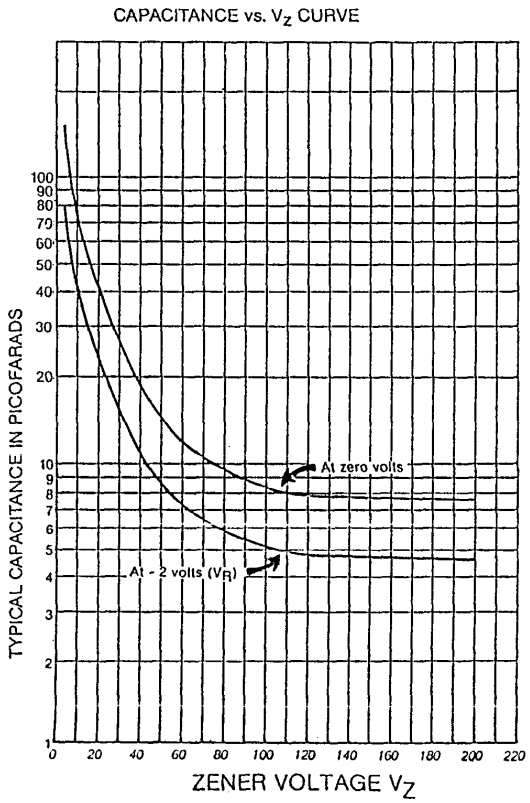

FIGURE 3
CAPACITANCE vs. ZENER VOLTAGE (TYPICAL)

PACKAGE DIMENSIONS

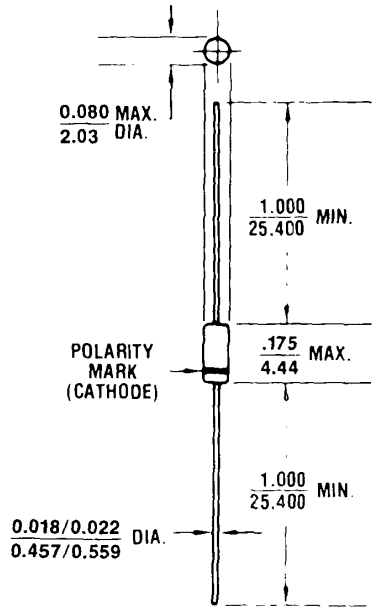

All dimensions in: INCH / mm

Copyright © 2003
10-31-2003 REV B