INFRARED RECEIVER

The TDA3048 is for infrared reception with low power consumption.
The difference between the TDA3048 and TDA3047 is the polarity of the output signal.

Features

- H.F. amplifier with a control range of 66 dB
- Synchronous demodulator and reference amplifier
- A.G.C. detector
- Pulse shaper
- Q-factor killing of the input selectivity, which is controlled by the a.g.c. circuit
- Input voltage limiter

QUICK REFERENCE DATA

Supply voltage (pin 8)	$V_P = V_{8\text{-}16}$	typ.	5 V
Supply current (pin 8)	$I_P = I_8$	typ.	2,1 mA
Input signal (peak-to-peak value) (100% AM; f = 36 kHz)	$V_{2\text{-}15(p\text{-}p)}$		0,03 to 200 mV
Output signal (peak-to-peak value)	$V_{9\text{-}16(p\text{-}p)}$	typ.	4,5 V

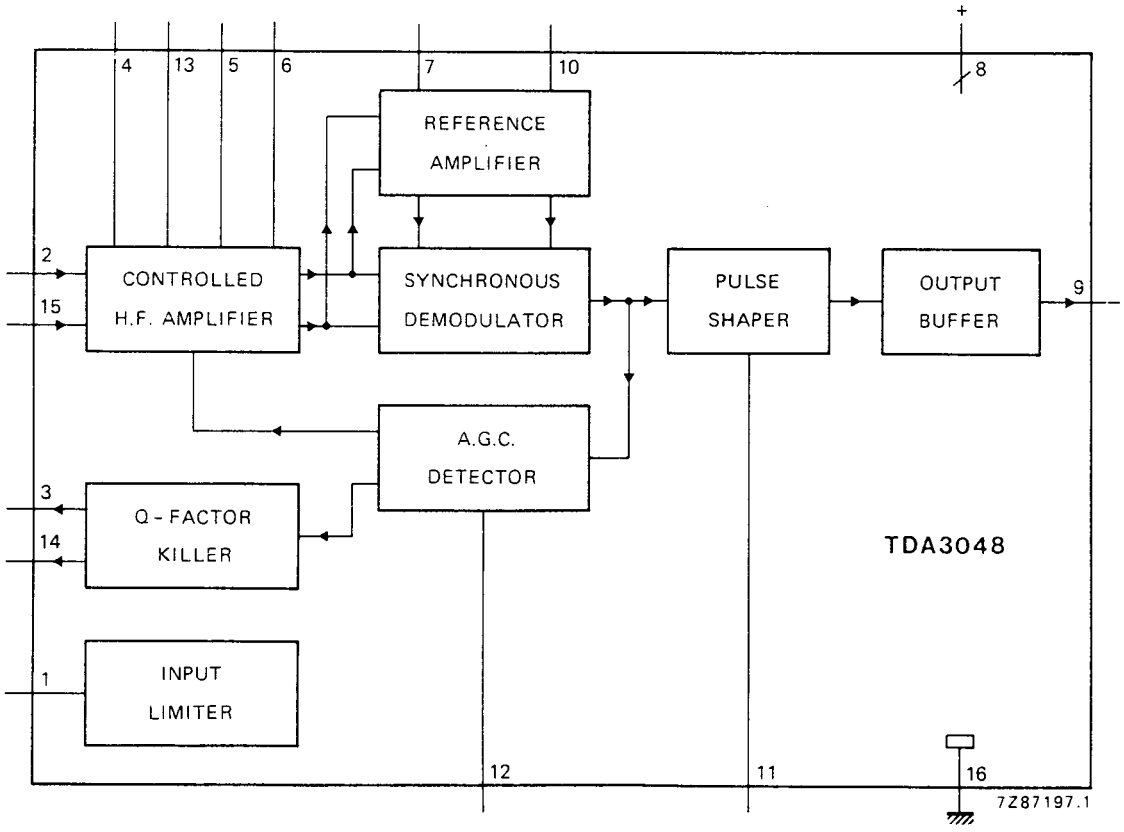

Fig. 1 Block diagram of TDA3048.

PACKAGE OUTLINES

TDA3048P: 16-lead DIL; plastic (SOT38).
TDA3048T: 16-lead mini-pack; plastic (SO16L; SOT162A).

FUNCTIONAL DESCRIPTION

General

The circuit operates from a 5 V supply and has a current consumption of 2 mA. The output is a current source which can drive or suppress a current of > 75 μA with a voltage swing of 4,5 V. The Q-killer circuit eliminates distortion of the output pulses due to the decay of the tuned input circuit at high input voltages. The input circuit is protected against signals of > 600 mV by an input limiter. The typical input is an AM signal at a frequency of 36 kHz. Figures 3 and 4 show the circuit diagrams for the application of narrow-band and wide-band receivers respectively. Circuit description of the eight sections shown in Fig. 1 are given below.

Controlled h.f. amplifier

The input signal is amplified by the gain-controlled amplifier. This circuit comprises three d.c. amplifier stages connected in cascade. The overall gain of the circuit is approximately 83 dB and the gain control range is in the order of 66 dB. Gain control is initially active in the second amplifier stage and is transferred to the first stage as limiting in the second stage occurs, thus maintaining optimum signal-to-noise ratio. Offset voltages in the d.c. coupled amplifier are minimized by two negative feedback loops; these also allow the circuit to have some series resistance of the decoupling capacitor. The output signal of the amplifier is applied to the reference amplifier and to the synchronous demodulator inputs.

Reference amplifier

The reference amplifier amplifies and limits the input signal. The voltage gain is approximately 0 dB. The output signal of this amplifier is applied to the synchronous demodulator.

Synchronous demodulator

In the synchronous demodulator the input signal and reference signal are multiplied. The demodulator output current is 25 μA peak-to-peak. The output signal of the demodulator is fed to the input of the a.g.c. detector and to the input of the pulse-shaper circuit.

A.G.C. detector

The a.g.c. detector comprises two n-p-n transistors operating as a differential pair. The top level of the output signal from the synchronous demodulator is detected by the a.g.c. circuit. Noise pulses are integrated by an internal capacitor. The output signal is amplified and applied to the first and second stages of the amplifier and to the Q-factor killer circuit.

Pulse-shaper

The pulse-shaper comprises two n-p-n transistors operating as a differential pair connected in parallel with the a.g.c. differential pair. The slicing level of the pulse shaper is lower than the slicing level of the a.g.c. detector. The output of the pulse-shaper is determined by the voltage of the capacitor connected to pin 11, which is applied directly to the output buffer.

Output buffer

The voltage of the pulse-shaper capacitor is fed to the base of the first transistor of a differential pair. To obtain a correct RC-5 code, a hysteresis circuit protects the output against spikes. The output at pin 9 is active *low*.

Q-factor killer

Figure 3 shows the Q-factor killer in the narrow-band application. In this application it is necessary to decrease the Q-factor of the input selectivity particularly when large input signals occur at pins 2 and 15. In the narrow-band application the output of the Q-factor killer can be directly coupled to the input; pin 3 to pin 2 and pin 14 to pin 15.

Input limiter

In the narrow-band application high voltage peaks can occur on the input of the selectivity circuit. The input limiter limits these voltage peaks to approximately 0,7 V. Limiting is 0,9 V max. at I_1 = 3 mA.

RATINGS

Limiting values in accordance with the Absolute Maximum System (IEC 134)

Supply voltage (pin 8)	$V_P = V_{8\text{-}16}$	max.	13,2	V
Output current pulse shaper (pin 11)	I_{11}	max.	10	mA
Voltages between pins*				
pins 2 and 15	$V_{2\text{-}15}$	max.	4,5	V
pins 4 and 13	$V_{4\text{-}13}$	max.	4,5	V
pins 5 and 6	$V_{5\text{-}6}$	max.	4,5	V
pins 7 and 10	$V_{7\text{-}10}$	max.	4,5	V
pins 9 and 11	$V_{9\text{-}11}$	max.	4,5	V
Storage temperature range	T_{stg}		−55 to + 150	°C
Operating ambient temperature range	T_{amb}		−25 to + 125	°C

* All pins except pin 11 are short-circuit protected.

CHARACTERISTICS

$V_P = V_{8\text{-}16} = 5$ V; $T_{amb} = 25$ °C; measured in Fig. 4; unless otherwise specified

parameter	symbol	min.	typ.	max.	unit
Supply (pin 8)					
Supply voltage	$V_P = V_{8\text{-}16}$	4,65	5,0	5,35	V
Supply current	$I_P = I_8$	1,2	2,1	3,0	mA
Controlled h.f. amplifier (pins 2 and 15)					
Minimum input signal (peak-to-peak value)					
at f = 36 kHz (note 1)	$V_{2\text{-}15(p\text{-}p)}$	–	15	25	μV
at f = 36 kHz (note 2)	$V_{2\text{-}15(p\text{-}p)}$	–	–	5	μV
A.G.C. control range (without Q-killing)		60	66	–	dB
Input signal for correct operation (peak-to-peak value; note 3)	$V_{2\text{-}15(p\text{-}p)}$	0,03	–	200	mV
Q-killing inactive ($I_3 = I_{14} < 0{,}5$ μA) (peak-to-peak value)	$V_{2\text{-}15(p\text{-}p)}$	–	–	140	μV
Q-killing active ($I_{14} = I_3$ = max.) (peak-to-peak value)	$V_{2\text{-}15(p\text{-}p)}$	28	–	–	mV
Q-killing range			see Fig. 2		
Inputs					
Input voltage (pin 2)	$V_{2\text{-}16}$	2,25	2,45	2,65	V
Input voltage (pin 15)	$V_{15\text{-}16}$	2,25	2,45	2,65	V
Input resistance (pin 2)	$R_{2\text{-}15}$	10	15	20	kΩ
Input capacitance (pin 2)	$C_{2\text{-}15}$	–	3	–	pF
Input limiting (pin 1) at I_1 = 3 mA	$V_{1\text{-}16}$	–	0,8	0,9	V
Outputs					
Output voltage *high* (pin 9) at $-I_9$ = 75 μA	$-V_{9\text{-}8}$	–	0,1	0,5	V
Output voltage *low* (pin 9) at I_9 = 75 μA	$V_{9\text{-}16}$	–	0,1	0,5	V
Output current; output voltage *low*					
$-V_{9\text{-}8}$ = 4,5 V	I_9	75	120	–	μA
$-V_{9\text{-}8}$ = 3,0 V	I_9	75	130	–	μA
$-V_{9\text{-}8}$ = 1,0 V	I_9	75	140	–	μA
Output current; output voltage *high*					
$-V_{9\text{-}8}$ = 0,5 V	$-I_9$	75	120	–	μA
Output resistance between pins 7 and 10	$R_{7\text{-}10}$	3,1	4,7	6,2	kΩ

Notes

1. Voltage pin 9 is *low*; I_9 = 75 μA.
2. Voltage pin 9 remains *high*.
3. Undistorted output pulse with 100% AM input.

parameter	symbol	min.	typ.	max.	unit
Pulse shaper (pin 11)					
Trigger level in positive direction (voltage pin 9 changes from *high* to *low*	V_{11-16}	3,75	3,9	4,05	V
Trigger level in negative direction (voltage pin 9 changes from *low* to *high*	V_{11-16}	3,4	3,55	3,7	V
Hysteresis of trigger levels	ΔV_{11-16}	0,25	0,35	0,45	V
A.G.C. detector (pin 12)					
A.G.C. capacitor charge current	$-I_{12}$	3,4	5,0	6,6	μA
A.G.C. capacitor discharge current	I_{12}	67	100	133	μA
Q-factor killer (pins 3 and 14)					
Output current (pin 3) at V_{12-16} = 2 V	$-I_3$	2,5	7,5	20	μA
Output current (pin 14) at V_{12-16} = 2 V	$-I_{14}$	2,5	7,5	20	μA

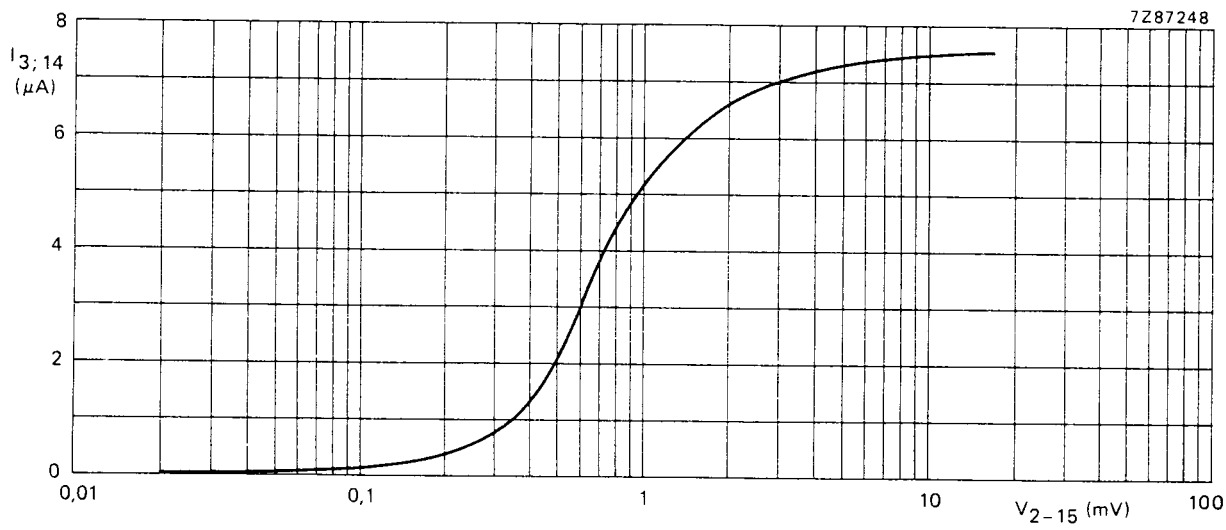

Fig. 2 Typical Q-factor killer current (pins 3 and 14) as a function of the peak-to-peak input voltage (V_{2-15}); $I_{3,14}$ is measured to ground, $V_{2-15(p-p)}$ is a symmetrical square wave. Measured in Fig. 4; V_P = 5 V.

APPLICATION INFORMATION

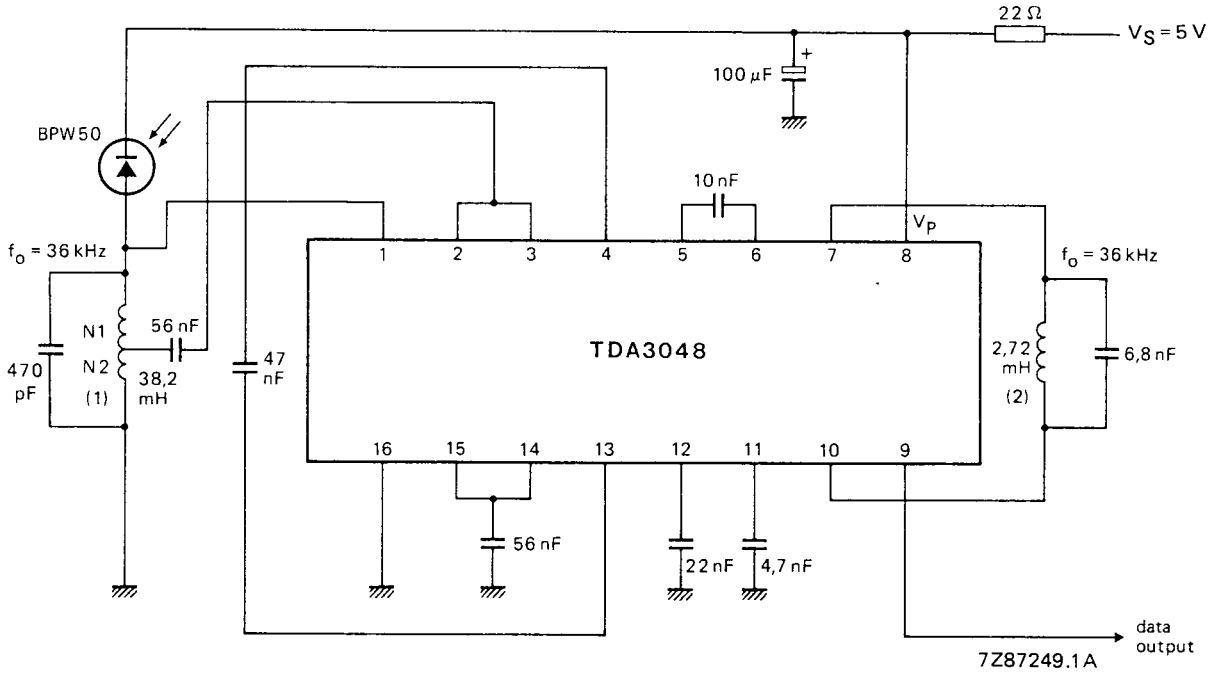

(1) N1 = 3,21
N2 = 1
Q = 16

(2) Q = 6

Fig. 3 Narrow-band receiver using TDA3048.

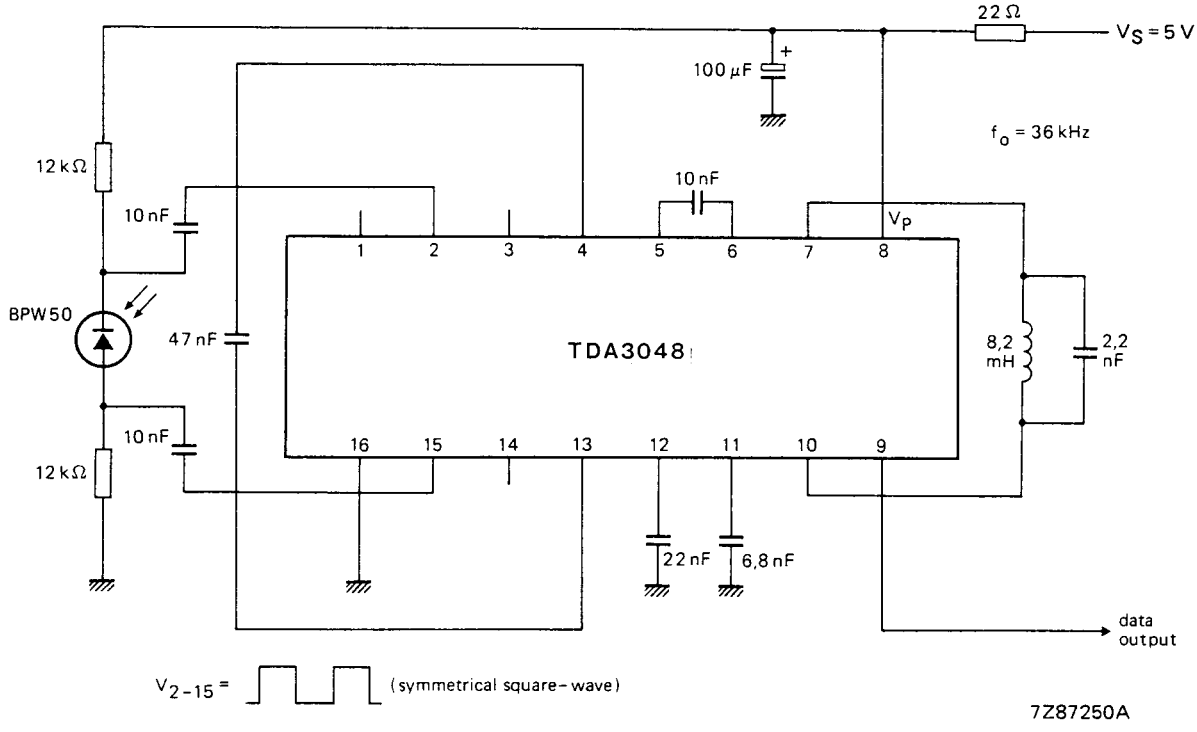

Fig. 4 Wide-band receiver with TDA3048.

For better sensitivity both 12 kΩ resistors may have a higher value.