XC6204/XC6205 Series

High Speed LDO Regulators　Output ON-OFF Control

■GENERAL DESCRIPTION

The XC6204/6205 series are highly precise, low noise, positive voltage LDO regulators manufactured using CMOS processes. The series achieves high ripple rejection and low dropout and consists of a standard voltage source, an error correction, current limiter and a phase compensation circuit plus a driver transistor.
Output voltage is selectable in 0.05V steps within a range of 0.9V ~ 6.0V.
The series is also compatible with low ESR ceramic capacitors which give added output stability. This stability can be maintained even during load fluctuations due to the excellent transient response of the series.
The current limiter's foldback circuit also operates as a short protect for the output current limiter and the output pin.
The CE function enables the output to be turned off, resulting in greatly reduced power consumption.

■APPLICATIONS

- ●Mobile phones
- ●Cordless phones
- ●Cameras, video recorders
- ●Portable games
- ●Portable AV equipment
- ●Reference voltage
- ●Battery powered equipment

■FEATURES

Maximum Output Current
: 150mA (300mA=XC6204 E to H TYP.)
Dropout Voltage : 200mV @ 100mA
60mV @ 30mA
Operating Voltage : 2V ~ 10V
Output Voltage Range
: 1.8V ~ 6.0V (XC6204) (0.05V increments)
0.9V ~ 1.75V (XC6205) (0.05V increments)
Highly Accurate : ±2%
Low Power Consumption : 70μA (TYP.)
Standby Current : Less than 0.1μA (TYP.)
High Ripple Rejection : 70dB (10kHz) (XC6204)
60dB (10kHz) (XC6205)
Operational Temperature Range
: -40℃ ~ 85℃
Low ESR Capacitor Compatible
: Ceramic capacitor

■TYPICAL APPLICATION CIRCUIT

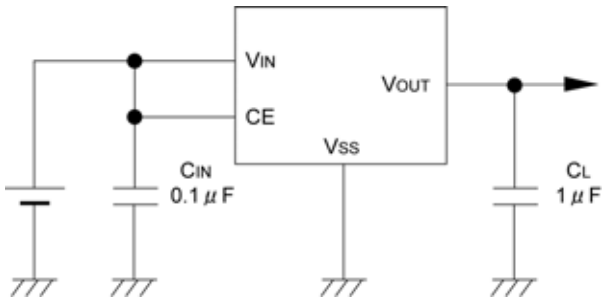

■TYPICAL PERFORMANCE CHARACTERISTICS

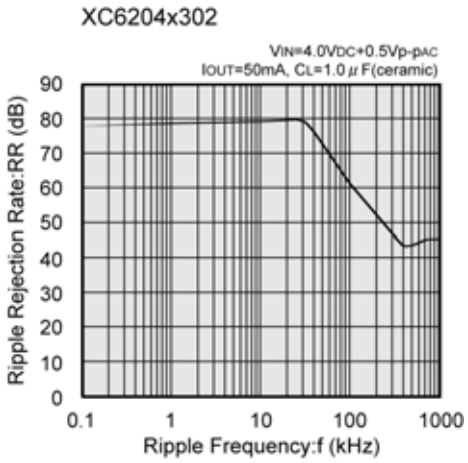

■PIN CONFIGURATION

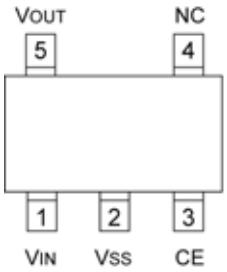

SOT-25
(TOP VIEW)

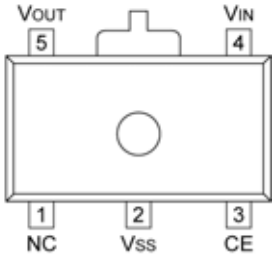

SOT-89-5
(TOP VIEW)

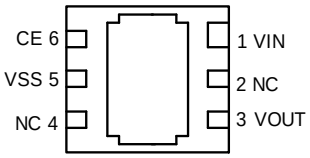

USP-6B
(BOTTOM VIEW)

*The dissipation pad for the USP-6B package should be solder-plated in recommended mount pattern and metal masking so as to enhance mounting strength and heal release. If the pad needs to be connected to other pins, it should be connected to the VSS (No.5) pin.

■PIN ASSIGNMENT

PIN NUMBER			PIN NAME	FUNCTION
SOT-25	SOT-89-5	USP-6B		
1	4	1	VIN	Input
2	2	5	VSS	Ground
3	3	6	CE	ON/OFF Control
4	1	2, 4	NC	No Connection
5	5	3	VOUT	Output

■FUNCTIONS

●XC6204/6205 A, B, E, F Series

CE	OPERATIONAL STATE
H	ON
L	OFF

●XC6204/6205 C, D, G, H Series

CE	OPERATIONAL STATE
H	OFF
L	ON

H= High Level
L= Low Level

■PRODUCT CLASSIFICATION

●Selection Guide

The following options for the CE pin logic and internal pull-up/down are available:

High Active + no pull-down resistor built-in (standard)

High Active + 300kΩ pull-down resistor built-in <between CE-VSS> (semi-custom)

Low Active + no pull-up resistor built-in (semi-custom)

Low Active + 300kΩ pull-up resistor built-in <between CE-VSS> (semi-custom)

Note:

With the pull-up resistor or pull-down resistor built-in types, the supply current during operation will increase by VIN / 300kΩ (TYP.)

●Ordering Information

XC6204/6205①②③④⑤⑥

DESIGNATOR	DESCRIPTION	SYMBOL	DESCRIPTION
① (*1)	Type of Regulator (CE pin Logic)	A / E	: High Active, pull-down resistor built-in
		B / F	: High Active, no pull-down resistor built-in
		C / G	: Low Active, pull-up resistor built-in
		D / H	: Low Active, no pull-up resistor built-in
② ③	Output Voltage	09 ~ 60,	: e.g. VOUT=2.0V②→=2, ③=0
④	Output Voltage Accuracy	2	: 100mV increments, ±2% accuracy e.g. VOUT=3.8V, ±2%→②=3, ③=8, ④=2
		1 (*2)	: 100mV increments, ±1% accuracy e.g. VOUT=3.0V, ±1%→②=3, ③=0, ④=1
		A	: 0.05V increments, ±2% accuracy e.g. VOUT=3.85V, ±2%→②=3, ③=8, ④=A
		B (*2)	: 0.05V increments, ±1% accuracy e.g. VOUT=3.05V, ±1%→②=3, ③=0, ④=B
⑤	Package	M	: SOT-25 (SOT-23-5)
		D	: USP-6B
		P	: SOT-89-5
⑥	Device Orientation	R	: Embossed tape, standard feed
		L	: Embossed tape, reverse feed

NOTE :

*1: E to H types are compatible to 300mA of XC6204 series.

*2: Output voltage range of the ±1% accuracy product is 3.0V to 6.0V.

■BLOCK DIAGRAM

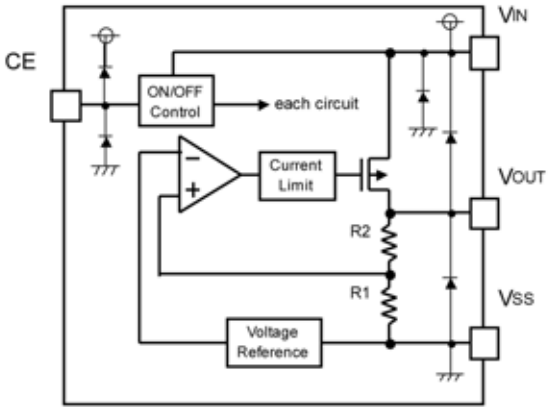

Diodes shown in the above circuit are protective diodes.

■ABSOLUTE MAXIMUM RATINGS

Ta=25℃

PARAMETER		SYMBOL	RATINGS	UNITS
Input Voltage		V_{IN}	12.0	V
Output Current		I_{OUT}	500	mA
Output Voltage		V_{OUT}	V_{SS}-0.3～V_{IN}+0.3	V
CE Input Voltage		V_{CE}	V_{SS}-0.3～V_{IN}+0.3	V
Power Dissipation	SOT-25	Pd	250	mW
	USP-6B		100	
	SOT-89-5		500	
Operational Temperature Range		Topr	-40 ~ +85	℃
Storage Temperature Range		Tstg	-55 ~ +125	℃

■ELECTRICAL CHARACTERISTICS

XC6204A, B series

PARAMETER	SYMBOL	CONDITIONS	Ta = 25℃			-40℃≦Ta≦85℃ (*7)			UNITS	CIRCUIT
			MIN.	TYP.	MAX.	MIN.	TYP.	MAX.		
Output Voltage (2% products) (*3)	$V_{OUT(E)}$	I_{OUT} = 30mA	×0.98	$V_{OUT(T)}$	×1.02	×0.97	$V_{OUT(T)}$	×1.03	V	1
Output Voltage (1% products) (*3)			×0.99		×1.01	×0.98		×1.02		
Maximum Output Current	I_{OUTMAX}	-	150	-	-	150	-	-	mA	1
Load Regulation	$\triangle V_{OUT}$	1mA≦I_{OUT}≦100mA	-	15	50	-	30	80	mV	1
Dropout Voltage (*4)	Vdif1	I_{OUT} = 30mA	E-1						mV	1
	Vdif2	I_{OUT} = 100mA	E-2							
Supply Current (A series)	I_{DD}	V_{IN} = V_{CE} = $V_{OUT(T)}$+1.0V	50	80	120	50	90	145	μA	2
Supply Current (B series)		V_{IN} = V_{CE} = $V_{OUT(T)}$+1.0V	40	70	100	40	80	120		
Standby Current	Istby	V_{IN} = $V_{OUT(T)}$+1.0V, V_{CE} = V_{SS}	-	0.01	0.10	-	0.05	1.00	μA	2
Line Regulation	$\triangle V_{OUT}$ / $\triangle V_{IN} \cdot V_{OUT}$	$V_{OUT(T)}$+1.0V≦V_{IN}≦10V I_{OUT} = 30mA	-	0.01	0.20	-	0.05	0.30	%/V	1
Input Voltage	V_{IN}	-	2	-	10	2	-	10	V	-
Output Voltage Temperature Characteristics	$\triangle V_{OUT}$ / $\triangle Topr \cdot V_{OUT}$	I_{OUT} = 30mA -40℃≦Topr≦85℃	-	100	-	-	-	-	ppm/℃	1
Output Noise	en	I_{OUT} = 10mA 300Hz~50kHz		30	-	-	-	-	μVrms	3
Ripple Rejection Rate	PSRR	V_{IN} = {$V_{OUT(T)}$+1.0}V+1.0Vp-pAC I_{OUT} = 50mA, f=10kHz	-	70	-	-	-	-	dB	4
Current Limiter	Ilim	V_{IN} = $V_{OUT(T)}$+1.0V, V_{CE} = V_{IN}	-	300	-	-	280	-	mA	1
Short-circuit Current	Ishort	V_{IN} = $V_{OUT(T)}$+1.0V, V_{CE} = V_{IN}	-	50	-	-	60	-	mA	1
CE "High" Voltage	V_{CEH}	-	1.6	-	V_{IN}	1.7	-	V_{IN}	V	1
CE "Low" Voltage	V_{CEL}	-	-	-	0.25	-	-	0.20		
CE "High" Current (A series)	I_{CEH}	V_{IN} = V_{CE} = $V_{OUT(T)}$+1.0V	3.2	-	20.0	3.0	-	25.0	μA	2
CE "High" Current (B series)		V_{IN} = V_{CE} = $V_{OUT(T)}$+1.0V	-0.10	-	0.10	-0.15	-	0.15		
CE "Low" Current	I_{CEL}	V_{IN} = $V_{OUT(T)}$+1.0V, V_{CE} = V_{SS}	-0.10	-	0.10	-0.15	-	0.15		

NOTE:

*1 : Unless otherwise stated, V_{IN}=$V_{OUT(T)}$+1.0V

*2 : $V_{OUT(T)}$=Specified output voltage

*3 : $V_{OUT(E)}$=Effective output voltage (i.e. the output voltage when "$V_{OUT(T)}$+1.0V" is provided at the V_{IN} pin while maintaining a certain I_{OUT} value).

*4 : Vdif={V_{IN1}(*6)-V_{OUT1}(*5)}

*5 : V_{OUT1}=A voltage equal to 98% of the output voltage whenever an amply stabilized I_{OUT} {$V_{OUT(T)}$+1.0V} is input.

*6 : V_{IN1}=The input voltage when V_{OUT1} appears as input voltage is gradually decreased.

*7 : The values for -40℃≦Topr≦85℃ are designed values.

■ELECTRICAL CHARACTERISTICS (Continued)

XC6204C, D series

PARAMETER	SYMBOL	CONDITIONS	Ta = 25℃			-40℃≦Ta≦85℃ (*7)			UNITS	CIRCUIT
			MIN.	TYP.	MAX.	MIN.	TYP.	MAX.		
Output Voltage (2% products) (*3)	$V_{OUT(E)}$	I_{OUT} = 30mA	×0.98	$V_{OUT(T)}$	×1.02	×0.97	$V_{OUT(T)}$	×1.03	V	1
Output Voltage (1% products) (*3)			×0.99		×1.01	×0.98		×1.02		
Maximum Output Current	I_{OUTMAX}	-	150	-	-	150	-	-	mA	1
Load Regulation	$\triangle V_{OUT}$	1mA≦I_{OUT}≦100mA	-	15	50	-	30	80	mV	1
Dropout Voltage (*4)	Vdif1	I_{OUT} = 30mA	E-1						mV	1
	Vdif2	I_{OUT} = 100mA	E-2							
Supply Current (C series)	I_{DD}	V_{IN} = $V_{OUT(T)}$+1.0V, V_{CE} = V_{SS}	50	80	120	50	90	145	μA	2
Supply Current (D series)		V_{IN} = $V_{OUT(T)}$+1.0V, V_{CE} = V_{SS}	40	70	100	40	80	120		
Standby Current	Istby	V_{IN} = V_{CE} = $V_{OUT(T)}$+1.0V	-	0.01	0.10	-	0.05	1.00	μA	2
Line Regulation	$\triangle V_{OUT}$ / $\triangle V_{IN} \cdot V_{OUT}$	V_{OUT}(T)+1.0V ≦V_{IN}≦10V I_{OUT} = 30mA	-	0.01	0.20	-	0.05	0.30	%/V	1
Input Voltage	V_{IN}	-	2	-	10	2	-	10	V	-
Output Voltage Temperature Characteristics	$\triangle V_{OUT}$ / $\triangle Topr \cdot V_{OUT}$	I_{OUT} = 30mA -40℃≦Topr≦85℃	-	100	-	-	-	-	ppm/℃	1
Output Noise	en	I_{OUT} = 10mA 300Hz~50kHz		30	-	-	-	-	μVrms	3
Ripple Rejection Rate	PSRR	V_{IN} = {$V_{OUT(T)}$+1.0}V+1.0Vp-pAC I_{OUT} = 50mA, f = 10kHz	-	70	-	-	-	-	dB	4
Current Limiter	Ilim	V_{IN} = $V_{OUT(T)}$+1.0V, V_{CE} = V_{SS}	-	300	-	-	280	-	mA	1
Short-circuit Current	Ishort	V_{IN} = $V_{OUT(T)}$+1.0V, V_{CE} = V_{SS}	-	50	-	-	60	-	mA	1
CE "High" Voltage	V_{CEH}	-	1.6	-	V_{IN}	1.7	-	V_{IN}	V	1
CE "Low" Voltage	V_{CEL}	-	-	-	0.25	-	-	0.20		
CE "High" Current	I_{CEH}	V_{IN} = V_{CE} = $V_{OUT(T)}$+1.0V	-0.10	-	0.10	-0.15	-	0.15	μA	2
CE "Low" Current (C series)	I_{CEL}	V_{IN} = $V_{OUT(T)}$+1.0V, V_{CE} = V_{SS}	-20.0	-	-3.2	-25.0	-	-3.0		
CE "Low" Current (D series)		V_{IN} = $V_{OUT(T)}$+1.0V, V_{CE} = V_{SS}	-0.10	-	0.10	-0.15	-	0.15		

NOTE:

*1 : Unless otherwise stated, V_{IN}=$V_{OUT(T)}$+1.0V

*2 : $V_{OUT(T)}$=Specified output voltage

*3 : $V_{OUT(E)}$=Effective output voltage (i.e. the output voltage when "$V_{OUT(T)}$+1.0V" is provided at the V_{IN} pin while maintaining a certain I_{OUT} value).

*4 : Vdif={V_{IN1} (*6)-V_{OUT1} (*5)}

*5 : V_{OUT1}=A voltage equal to 98% of the output voltage whenever an amply stabilized I_{OUT} {$V_{OUT(T)}$+1.0V} is input.

*6 : V_{IN1}=The input voltage when V_{OUT1} appears as input voltage is gradually decreased.

*7 : The values for -40℃≦Topr≦85℃ are designed values.

■ELECTRICAL CHARACTERISTICS (Continued)

XC6204E, F series

PARAMETER	SYMBOL	CONDITIONS	Ta = 25℃			UNITS	CIRCUIT
			MIN.	TYP.	MAX.		
Output Voltage (2% products) (*3)	$V_{OUT(E)}$	I_{OUT} = 30mA	E-0			V	1
Maximum Output Current	I_{OUTMAX}	V_{IN} = $V_{OUT(T)}$+1.0V When V_{OUT}≦2.0V, V_{IN} = 3.0V	300	-	-	mA	1
Load Regulation	$\triangle V_{OUT}$	1mA≦I_{OUT}≦100mA	-	15	50	mV	1
Dropout Voltage (*4)	Vdif1	I_{OUT} = 30mA	E-1			mV	1
	Vdif2	I_{OUT} = 100mA	E-2				
Supply Current (E series)	I_{DD}	V_{IN} = V_{CE} = $V_{OUT(T)}$+1.0V	50	80	120	μA	2
Supply Current (F series)		V_{IN} = V_{CE} = $V_{OUT(T)}$+1.0V	40	70	100		
Standby Current	Istby	V_{IN} = $V_{OUT(T)}$+1.0V, V_{CE} = V_{SS}	-	0.01	0.10	μA	2
Line Regulation	$\frac{\triangle V_{OUT}}{\triangle V_{IN} \cdot V_{OUT}}$	$V_{OUT(T)}$+1.0V≦V_{IN}≦10V I_{OUT} = 30mA	-	0.01	0.20	%/V	1
Input Voltage	V_{IN}	-	2	-	10	V	-
Output Voltage Temperature Characteristics	$\frac{\triangle V_{OUT}}{\triangle Topr \cdot V_{OUT}}$	I_{OUT} = 30mA -40℃≦Topr≦85℃	-	100	-	ppm/℃	1
Output Noise	en	I_{OUT} = 10mA 300Hz~50kHz		30	-	μVrms	3
Ripple Rejection Rate	PSRR	V_{IN} = {$V_{OUT(T)}$+1.0}V+1.0Vp-pAC I_{OUT} = 50mA, f = 10kHz	-	70	-	dB	4
Current Limiter	Ilim	V_{IN} = $V_{OUT(T)}$+1.0V, V_{CE} = V_{IN}	-	380	-	mA	1
Short-circuit Current	Ishort	V_{IN} = $V_{OUT(T)}$+1.0V, V_{CE} = V_{IN}	-	50	-	mA	1
CE "High" Voltage	V_{CEH}	-	1.6	-	V_{IN}	V	1
CE "Low" Voltage	V_{CEL}	-	-	-	0.25		
CE "High" Current (E series)	I_{CEH}	V_{IN} = V_{CE} = $V_{OUT(T)}$+1.0V	3.2	-	20.0	μA	2
CE "High" Current (F series)		V_{IN} = V_{CE} = $V_{OUT(T)}$+1.0V	-0.10	-	0.10		
CE "Low" Current	I_{CEL}	V_{IN} = $V_{OUT(T)}$+1.0V, V_{CE} = V_{SS}	-0.10	-	0.10	μA	2

NOTE:

*1 : Unless otherwise stated, V_{IN}=$V_{OUT(T)}$+1.0V

*2 : $V_{OUT(T)}$=Specified output voltage

*3 : $V_{OUT(E)}$=Effective output voltage (i.e. the output voltage when "$V_{OUT(T)}$+1.0V" is provided at the V_{IN} pin while maintaining a certain I_{OUT} value).

*4 : Vdif={V_{IN1} (*6)-V_{OUT1} (*5)}

*5 : V_{OUT1}=A voltage equal to 98% of the output voltage whenever an amply stabilized I_{OUT} {$V_{OUT(T)}$+1.0V} is input.

*6 : V_{IN1}=The input voltage when V_{OUT1} appears as input voltage is gradually decreased.

■ELECTRICAL CHARACTERISTICS (Continued)

XC6204G, H series

PARAMETER	SYMBOL	CONDITIONS	Ta = 25℃			UNITS	CIRCUIT
			MIN.	TYP.	MAX.		
Output Voltage (2% products) (*3)	$V_{OUT(E)}$	I_{OUT} = 30mA	E-0			V	1
Maximum Output Current	I_{OUTMAX}	V_{IN} = $V_{OUT(T)}$+1.0V When V_{OUT}≦2.0V, V_{IN} = 3.0V	300	-	-	mA	1
Load Regulation	△V_{OUT}	1mA≦I_{OUT}≦100mA	-	15	50	mV	1
Dropout Voltage (*4)	Vdif1	I_{OUT} = 30mA	E-1			mV	1
	Vdif2	I_{OUT} = 100mA	E-2				
Supply Current (G series)	I_{DD}	V_{IN} = $V_{OUT(T)}$+1.0V, V_{CE} = V_{SS}	50	80	120	μA	2
Supply Current (H series)		V_{IN} = $V_{OUT(T)}$+1.0V, V_{CE} = V_{SS}	40	70	100		
Standby Current	Istby	V_{IN} = V_{CE} =$V_{OUT(T)}$+1.0V	-	0.01	0.10	μA	2
Line Regulation	△V_{OUT} / △V_{IN}・V_{OUT}	$V_{OUT(T)}$+1.0V≦V_{IN}≦10V I_{OUT} = 30mA	-	0.01	0.20	%/V	1
Input Voltage	V_{IN}	-	2	-	10	V	-
Output Voltage Temperature Characteristics	△V_{OUT} / △Topr・V_{OUT}	I_{OUT} = 30mA -40℃≦Topr≦85℃	-	100	-	ppm/℃	1
Output Noise	en	I_{OUT} = 10mA 300Hz~50kHz		30	-	μVrms	3
Ripple Rejection Rate	PSRR	V_{IN} = {$V_{OUT(T)}$+1.0}V+1.0Vp-pAC I_{OUT} = 50mA, f = 10kHz	-	70	-	dB	4
Current Limiter	Ilim	V_{IN} = $V_{OUT(T)}$+1.0V, V_{CE} = V_{SS}	-	380	-	mA	1
Short-circuit Current	Ishort	V_{IN} = $V_{OUT(T)}$+1.0V, V_{CE} = V_{SS}	-	50	-	mA	1
CE "High" Voltage	V_{CEH}	-	1.6	-	V_{IN}	V	1
CE "Low" Voltage	V_{CEL}	-	-	-	0.25		
CE "High" Current	I_{CEH}	V_{IN} = V_{CE} = $V_{OUT(T)}$+1.0V	-0.10	-	0.10	μA	2
CE "Low" Current (G series)	I_{CEL}	V_{IN} = $V_{OUT(T)}$+1.0V, V_{CE} = V_{SS}	-20.0	-	-3.2		
CE "Low" Current (H series)		V_{IN} = $V_{OUT(T)}$+1.0V, V_{CE} = V_{SS}	-0.10	-	0.10		

NOTE:

*1 : Unless otherwise stated, V_{IN}=V_{OUT}(T)+1.0V

*2 : $V_{OUT(T)}$=Specified output voltage

*3 : $V_{OUT(E)}$=Effective output voltage (i.e. the output voltage when "$V_{OUT\ (T)}$+1.0V" is provided at the V_{IN} pin while maintaining a certain I_{OUT} value).

*4 : Vdif={V_{IN1} (*6)-V_{OUT1} (*5)}

*5 : V_{OUT1}=A voltage equal to 98% of the output voltage whenever an amply stabilized I_{OUT} {$V_{OUT(T)}$+1.0V} is input.

*6 : V_{IN1}=The input voltage when V_{OUT1} appears as input voltage is gradually decreased.

■ELECTRICAL CHARACTERISTICS (Continued)

XC6205A, B series

PARAMETER	SYMBOL	CONDITIONS	Ta = 25℃ MIN.	TYP.	MAX.	UNITS	CIRCUIT
Output Voltage (*3) (*7)	$V_{OUT(E)}$	I_{OUT} = 30mA	×0.98	$V_{OUT(T)}$	×1.02	V	1
Maximum Output Current	I_{OUTMAX}		150	-	-	mA	1
Load Regulation	ΔV_{OUT}	1mA≦I_{OUT}≦100mA	-	15	50	mV	1
Dropout Voltage (*4)	Vdif1	I_{OUT} = 30mA	E-1			mV	1
	Vdif2	I_{OUT} = 100mA	E-2				
Supply Current (A series)	I_{DD}	V_{IN} = V_{CE} = $V_{OUT(T)}$+1.0V When V_{OUT}≦0.95V, V_{IN} = V_{CE} = 2.0V	50	80	120	μA	2
Supply Current (B series)		V_{IN} = V_{CE} = $V_{OUT(T)}$+1.0V When V_{OUT}≦0.95V, V_{IN} = V_{CE} = 2.0V	40	70	100		
Standby Current	Istby	V_{IN} = $V_{OUT(T)}$+1.0V, V_{CE} = V_{SS} When V_{OUT}≦0.95V, V_{IN} = 2.0V	-	0.01	0.10	μA	2
Line Regulation	$\frac{\Delta V_{OUT}}{\Delta V_{IN} \cdot V_{OUT}}$	$V_{OUT(T)}$+1.0V≦V_{IN}≦10V I_{OUT} = 30mA, V_{CE} = V_{IN} When V_{OUT}≦0.95V, 2.0V≦V_{IN}≦10V	-	0.01	0.20	%/V	1
Input Voltage	V_{IN}	-	2	-	10	V	-
Output Voltage Temperature Characteristics	$\frac{\Delta V_{OUT}}{\Delta Topr \cdot V_{OUT}}$	I_{OUT} = 30mA -40℃≦Topr≦85℃	-	100	-	ppm/℃	1
Output Noise	en	I_{OUT} = 10mA 300Hz~50kHz	-	30	-	μVrms	3
Ripple Rejection Rate	PSRR	V_{IN} = {$V_{OUT(T)}$+1.0}V+1.0Vp-pAC When V_{OUT}≦1.5V, V_{IN} =2.5V+1.0Vp-pAC I_{OUT} = 50mA, f = 10kHz	-	65	-	dB	4
Current Limiter	Ilim	V_{IN} = $V_{OUT(T)}$+2.0V, V_{CE} = V_{IN}	-	300	-	mA	1
Short-circuit Current	Ishort	V_{IN} = $V_{OUT(T)}$+2.0V, V_{CE} = V_{IN}	-	50	-	mA	1
CE "High" Voltage	V_{CEH}	-	1.6	-	V_{IN}	V	1
CE "Low" Voltage	V_{CEL}	-	-	-	0.25		
CE "High" Current (A series)	I_{CEH}	V_{IN} = V_{CE} = $V_{OUT(T)}$+1.0V When V_{OUT}≦0.95V, V_{IN} = V_{CE} = 2.0V	3.2	-	20.0	μA	2
CE "High" Current (B series)		V_{IN} = V_{CE} = $V_{OUT(T)}$+1.0V When V_{OUT}≦0.95V, V_{IN} = V_{CE} = 2.0V	-0.10	-	0.10		
CE "Low" Current	I_{CEL}	V_{IN} = $V_{OUT(T)}$+1.0V, V_{CE} = V_{SS} When V_{OUT}≦0.95V, V_{IN} = 2.0V	-0.10	-	0.10		

NOTE:

*1 : Unless otherwise stated, V_{IN}=$V_{OUT(T)}$+1.0V
However, when V_{OUT}≦0.95V, V_{IN}=2.0V

*2 : $V_{OUT(T)}$=Specified output voltage

*3 : $V_{OUT(E)}$=Effective output voltage (i.e. the output voltage when "$V_{OUT(T)}$+1.0V" is provided at the V_{IN} pin while maintaining a certain I_{OUT} value).

*4 : Vdif={V_{IN1} (*6)-V_{OUT1} (*5)}

*5 : V_{OUT1}=A voltage equal to 98% of the output voltage whenever an amply stabilized I_{OUT} {$V_{OUT(T)}$+1.0V} is input.

*6 : V_{IN1}=The input voltage when V_{OUT1} appears as input voltage is gradually decreased.

*8 : When $V_{OUT(T)}$≦1.45V, MIN. ⇒ $V_{OUT(T)}$-30mV
MAX.⇒ $V_{OUT(T)}$+30mV

■ELECTRICAL CHARACTERISTICS (Continued)

XC6205C, D series

PARAMETER	SYMBOL	CONDITIONS	Ta = 25℃			UNITS	CIRCUIT
			MIN.	TYP.	MAX.		
Output Voltage (*3) (*7)	$V_{OUT(E)}$	I_{OUT} = 30mA	×0.98	$V_{OUT(T)}$	×1.02	V	1
Maximum Output Current	I_{OUTMAX}		150	-	-	mA	1
Load Regulation	$\triangle V_{OUT}$	1mA≦I_{OUT}≦100mA	-	15	50	mV	1
Dropout Voltage (*4)	Vdif1	I_{OUT} = 30mA	E-1			mV	1
	Vdif2	I_{OUT} = 100mA	E-2				
Supply Current (C series)	I_{DD}	V_{IN} = $V_{OUT(T)}$+1.0V, V_{CE} = V_{SS} When V_{OUT}≦0.95V, V_{IN} = 2.0V	50	80	120	μA	2
Supply Current (D series)		V_{IN} = $V_{OUT(T)}$+1.0V, V_{CE} = V_{SS} When V_{OUT}≦0.95V, V_{IN} = 2.0V	40	70	100		
Standby Current	Istby	V_{IN} = V_{CE} =$V_{OUT(T)}$+1.0V When V_{OUT}≦0.95V, V_{IN} = V_{CE} = 2.0V	-	0.01	0.10	μA	2
Line Regulation	$\frac{\triangle V_{OUT}}{\triangle V_{IN} \cdot V_{OUT}}$	$V_{OUT(T)}$+1.0V≦V_{IN}≦10V I_{OUT} = 30mA, V_{CE} = V_{SS} When V_{OUT}≦0.95V, 2.0V≦V_{IN}≦10V	-	0.01	0.20	%/V	1
Input Voltage	V_{IN}	-	2	-	10	V	-
Output Voltage Temperature Characteristics	$\frac{\triangle V_{OUT}}{\triangle Topr \cdot V_{OUT}}$	I_{OUT} = 30mA -40℃≦Topr≦85℃	-	100	-	ppm/℃	1
Output Noise	en	I_{OUT} = 10mA 300Hz~50kHz	-	30	-	μVrms	3
Ripple Rejection Rate	PSRR	V_{IN} = {$V_{OUT(T)}$+1.0}V+1.0Vp-pAC When V_{OUT}≦1.5V, V_{IN} =2.5V+1.0Vp-pAC I_{OUT} = 50mA, f = 10kHz	-	65	-	dB	4
Current Limiter	Ilim	V_{IN} = $V_{OUT(T)}$+2.0V, V_{CE} = V_{SS}	-	300	-	mA	1
Short-circuit Current	Ishort	V_{IN} = $V_{OUT(T)}$+2.0V, V_{CE} = V_{SS}	-	50	-	mA	1
CE "High" Voltage	V_{CEH}	-	1.6	-	V_{IN}	V	1
CE "Low" Voltage	V_{CEL}	-	-	-	0.25		
CE "High" Current	I_{CEH}	V_{IN} = V_{CE} = $V_{OUT(T)}$+1.0V When V_{OUT}≦0.95V, V_{IN} = V_{CE} = 2.0V	-0.10	-	0.10	μA	2
CE "Low" Current (C series)	I_{CEL}	V_{IN} = $V_{OUT(T)}$+1.0V, V_{CE} = V_{SS} When V_{OUT}≦0.95V, V_{IN} = 2.0V	-20.0	-	-3.2		
CE "Low" Current (D series)		V_{IN} = $V_{OUT(T)}$+1.0V, V_{CE} = V_{SS} When V_{OUT}≦0.95V, V_{IN} = 2.0V	-0.10	-	0.10		

NOTE:

*1 : Unless otherwise stated, V_{IN}=$V_{OUT(T)}$+1.0V
However, when V_{OUT}≦0.95V, V_{IN}=2.0V

*2 : $V_{OUT(T)}$=Specified output voltage

*3 : $V_{OUT(E)}$=Effective output voltage (i.e. the output voltage when "$V_{OUT(T)}$+1.0V" is provided at the V_{IN} pin while maintaining a certain I_{OUT} value).

*4 : Vdif={$V_{IN1}^{(*6)}$-$V_{OUT1}^{(*5)}$}

*5 : V_{OUT1}=A voltage equal to 98% of the output voltage whenever an amply stabilized I_{OUT} {$V_{OUT(T)}$+1.0V} is input.

*6 : V_{IN1}=The input voltage when V_{OUT1} appears as input voltage is gradually decreased.

*7 : When $V_{OUT(T)}$≦1.45V, MIN. ⇒ $V_{OUT(T)}$-30mV
MAX.⇒ $V_{OUT(T)}$+30mV

■ELECTRICAL CHARACTERISTICS (Continued)

XC6205E, F series

PARAMETER	SYMBOL	CONDITIONS	Ta = 25℃			UNITS	CIRCUIT
			MIN.	TYP.	MAX.		
Output Voltage (*3) (*7)	$V_{OUT(E)}$	I_{OUT} = 30mA	×0.98	$V_{OUT(T)}$	×1.02	V	1
Maximum Output Current (*8)	I_{OUTMAX}	V_{IN} = E-5	E-4			mA	1
Load Regulation	$\triangle V_{OUT}$	1mA≦I_{OUT}≦100mA	-	15	50	mV	1
Dropout Voltage (*4)	Vdif1	I_{OUT} = 30mA	E-1			mV	1
	Vdif2	I_{OUT} = 100mA	E-2				
Supply Current (E series)	I_{DD}	V_{IN} = $V_{OUT(T)}$+1.0V, V_{CE} = V_{SS} When V_{OUT}≦0.95V, V_{IN} = V_{CE} = 2.0V	50	80	120	μA	2
Supply Current (F series)		V_{IN} = V_{CE} =$V_{OUT(T)}$+1.0V When V_{OUT}≦0.95V, V_{IN} = V_{CE} = 2.0V	40	70	100		
Standby Current	Istby	V_{IN} = $V_{OUT(T)}$+1.0V, V_{CE} = V_{SS} When V_{OUT}≦0.95V, V_{IN} = 2.0V	-	0.01	0.10	μA	2
Line Regulation	$\frac{\triangle V_{OUT}}{\triangle V_{IN} \cdot V_{OUT}}$	$V_{OUT(T)}$+1.0V≦V_{IN}≦10V I_{OUT} = 30mA, V_{CE} = V_{IN} When V_{OUT}≦0.95V, 2.0V≦V_{IN}≦10V	-	0.01	0.20	%/V	1
Input Voltage	V_{IN}	-	2	-	10	V	-
Output Voltage Temperature Characteristics	$\frac{\triangle V_{OUT}}{\triangle Topr \cdot V_{OUT}}$	I_{OUT} = 30mA -40℃≦Topr≦85℃	-	100	-	ppm/℃	1
Output Noise	en	I_{OUT} = 10mA 300Hz~50kHz	-	30	-	μVrms	3
Ripple Rejection Rate	PSRR	V_{IN} = {$V_{OUT(T)}$+1.0}V+1.0Vp-pAC When V_{OUT}≦1.5V, V_{IN} =2.5V+1.0Vp-pAC I_{OUT} = 50mA, f = 10kHz	-	65	-	dB	4
Current Limiter	Ilim	V_{IN} = $V_{OUT(T)}$+2.0V, V_{CE} = V_{IN}	-	380	-	mA	1
Short-circuit Current	Ishort	V_{IN} = $V_{OUT(T)}$+2.0V, V_{CE} = V_{IN}	-	50	-	mA	1
CE "High" Voltage	V_{CEH}	-	1.6	-	V_{IN}	V	1
CE "Low" Voltage	V_{CEL}	-	-	-	0.25		
CE "High" Current (E series)	I_{CEH}	V_{IN} = V_{CE} = $V_{OUT(T)}$+1.0V When V_{OUT}≦0.95V, V_{IN} = V_{CE} = 2.0V	3.2	-	20.0	μA	2
CE "High" Current (F series)		V_{IN} = V_{CE} = $V_{OUT(T)}$+1.0V When V_{OUT}≦0.95V, V_{IN} = V_{CE} = 2.0V	-0.10	-	0.10		
CE "Low" Current	I_{CEL}	V_{IN} = $V_{OUT(T)}$+1.0V, V_{CE} = V_{SS} When V_{OUT}≦0.95V, V_{IN} = 2.0V	-0.10	-	0.10		

NOTE:

*1 : Unless otherwise stated, V_{IN}=$V_{OUT(T)}$+1.0V
However, when V_{OUT}≦0.95V, V_{IN}=2.0V

*2 : $V_{OUT(T)}$=Specified output voltage

*3 : V_{OUT}(E)=Effective output voltage (i.e. the output voltage when "$V_{OUT(T)}$+1.0V" is provided at the V_{IN} pin while maintaining a certain I_{OUT} value).

*4 : Vdif={V_{IN1}(*6)-V_{OUT1}(*5)}

*5 : V_{OUT1}=A voltage equal to 98% of the output voltage whenever an amply stabilized I_{OUT} {$V_{OUT(T)}$+1.0V} is input.

*6 : V_{IN1}=The input voltage when V_{OUT1} appears as input voltage is gradually decreased.

*7 : When $V_{OUT(T)}$≦1.45V, MIN. ⇒ $V_{OUT(T)}$-30mV
MAX.⇒ $V_{OUT(T)}$+30mV

*8 : Refer to "Specification & Condition by Series"

■ELECTRICAL CHARACTERISTICS (Continued)

XC6205G, H series

PARAMETER	SYMBOL	CONDITIONS	Ta = 25℃			UNITS	CIRCUIT
			MIN.	TYP.	MAX.		
Output Voltage (*3) (*7)	$V_{OUT(E)}$	I_{OUT} = 30mA	×0.98	$V_{OUT(T)}$	×1.02	V	1
Maximum Output Current (*8)	I_{OUTMAX}	V_{IN} = E-5	E-4	-	-	mA	1
Load Regulation	$\triangle V_{OUT}$	1mA≦I_{OUT}≦100mA	-	15	50	mV	1
Dropout Voltage (*4)	Vdif1	I_{OUT} = 30mA	E-1			mV	1
	Vdif2	I_{OUT} = 100mA	E-2				
Supply Current (G series)	I_{DD}	V_{IN} = $V_{OUT(T)}$+1.0V, V_{CE} = V_{SS} When V_{OUT}≦0.95V, V_{IN} = 2.0V	50	80	120	μA	2
Supply Current (H series)		V_{IN} = $V_{OUT(T)}$+1.0V, V_{CE} = V_{SS} When V_{OUT}≦0.95V, V_{IN} = 2.0V	40	70	100		
Standby Current	Istby	V_{IN} = V_{CE} =$V_{OUT(T)}$+1.0V When V_{OUT}≦0.95V, V_{IN} = V_{CE} = 2.0V	-	0.01	0.10	μA	2
Line Regulation	$\frac{\triangle V_{OUT}}{\triangle V_{IN} \cdot V_{OUT}}$	$V_{OUT(T)}$+1.0V≦V_{IN}≦10V I_{OUT} = 30mA, V_{CE} = V_{SS} When V_{OUT}≦0.95V, 2.0V≦V_{IN}≦10V	-	0.01	0.20	%/V	1
Input Voltage	V_{IN}	-	2	-	10	V	-
Output Voltage Temperature Characteristics	$\frac{\triangle V_{OUT}}{\triangle Topr \cdot V_{OUT}}$	I_{OUT} = 30mA -40℃≦Topr≦85℃	-	100	-	ppm/℃	1
Output Noise	en	I_{OUT} = 10mA 300Hz~50kHz	-	30	-	μVrms	3
Ripple Rejection Rate	PSRR	V_{IN} = {$V_{OUT(T)}$+1.0}V+1.0Vp-pAC When V_{OUT}≦1.5V, V_{IN} =2.5V+1.0Vp-pAC I_{OUT} = 50mA, f = 10kHz	-	65	-	dB	4
Current Limiter	Ilim	V_{IN} = $V_{OUT(T)}$+2.0V, V_{CE} = V_{SS}	-	380	-	mA	1
Short-circuit Current	Ishort	V_{IN} = $V_{OUT(T)}$+2.0V, V_{CE} = V_{SS}	-	50	-	mA	1
CE "High" Voltage	V_{CEH}	-	1.6	-	V_{IN}	V	1
CE "Low" Voltage	V_{CEL}	-	-	-	0.25		
CE "High" Current	I_{CEH}	V_{IN} = V_{CE} = $V_{OUT(T)}$+1.0V When V_{OUT}≦0.95V, V_{IN} = V_{CE} = 2.0V	-0.10	-	0.10	μA	2
CE "Low" Current (G series)	I_{CEL}	V_{IN} = $V_{OUT(T)}$+1.0V, V_{CE} = V_{SS} When V_{OUT}≦0.95V, V_{IN} = 2.0V	-20.0	-	-3.2		
CE "Low" Current (H series)		V_{IN} = $V_{OUT(T)}$+1.0V, V_{CE} = V_{SS} When V_{OUT}≦0.95V, V_{IN} = 2.0V	-0.10	-	0.10		

NOTE:

*1 : Unless otherwise stated, V_{IN}=V_{OUT}(T)+1.0V
However, when V_{OUT}≦0.95V, V_{IN}=2.0V

*2 : $V_{OUT(T)}$=Specified output voltage

*3 : $V_{OUT(E)}$=Effective output voltage (i.e. the output voltage when "$V_{OUT\ (T)}$+1.0V" is provided at the V_{IN} pin while maintaining a certain I_{OUT} value).

*4 : Vdif={$V_{IN1}^{(*6)}$-$V_{OUT1}^{(*5)}$}

*5 : V_{OUT1}=A voltage equal to 98% of the output voltage whenever an amply stabilized I_{OUT} {$V_{OUT(T)}$+1.0V} is input.

*6 : V_{IN1}=The input voltage when V_{OUT1} appears as input voltage is gradually decreased.

*7 : When $V_{OUT(T)}$≦1.45V, MIN. ⇒ $V_{OUT\ (T)}$-30mV
MAX.⇒ $V_{OUT\ (T)}$+30mV

*8 : Refer to "Specification & Condition by Series"

■ELECTRICAL CHARACTERISTICS (Continued)

●Voltage Chart

XC6204 series Note: For the XC6204E, F, G, H series, see the item “Ta=25℃” only.

SYMBOL	E-0		E-1				E-2			
PARAMETER / SETTING OUTPUT VOLTAGE (V)	OUTPUT VOLTAGE (V) (2% products)		DROPOUT VOLTAGE 1 (mV) IOUT=30mA				DROPOUT VOLTAGE 2 (mV) IOUT=100mA			
VOUT (T)	VOUT		Vdif 1				Vdif 2			
			Ta = 25℃		-40℃≦Topr≦85℃		Ta = 25℃		-40℃≦Topr≦85℃	
	MIN.	MAX.	TYP.	MAX.	TYP.	MAX.	TYP.	MAX.	TYP.	MAX.
1.80	1.764	1.836	200	210	210	230	300	400	340	480
1.85	1.813	1.887	200	210	210	230	300	400	340	480
1.90	1.862	1.938	120	150	130	170	280	380	320	460
1.95	1.911	1.989	120	150	130	170	280	380	320	460
2.00	1.960	2.040	80	120	90	140	240	350	280	430
2.05	2.009	2.091	80	120	90	140	240	350	280	430
2.10	2.058	2.142	80	120	90	140	240	330	280	410
2.15	2.107	2.193	80	120	90	140	240	330	280	410
2.20	2.156	2.244	80	120	90	140	240	330	280	410
2.25	2.205	2.295	80	120	90	140	240	330	280	410
2.30	2.254	2.346	80	120	90	140	240	310	280	390
2.35	2.303	2.397	80	120	90	140	240	310	280	390
2.40	2.352	2.448	80	120	90	140	240	310	280	390
2.45	2.401	2.499	80	120	90	140	240	310	280	390
2.50	2.450	2.550	70	100	80	120	220	290	260	370
2.55	2.499	2.601	70	100	80	120	220	290	260	370
2.60	2.548	2.652	70	100	80	120	220	290	260	370
2.65	2.597	2.703	70	100	80	120	220	290	260	370
2.70	2.646	2.754	70	100	80	120	220	290	260	370
2.75	2.695	2.805	70	100	80	120	220	290	260	370
2.80	2.744	2.856	70	100	80	120	220	270	260	350
2.85	2.793	2.907	70	100	80	120	220	270	260	350
2.90	2.842	2.958	70	100	80	120	220	270	260	350
2.95	2.891	3.009	70	100	80	120	220	270	260	350
3.00	2.940	3.060	60	90	70	110	200	270	240	350
3.05	2.989	3.111	60	90	70	110	200	270	240	350
3.10	3.038	3.162	60	90	70	110	200	250	240	330
3.15	3.087	3.213	60	90	70	110	200	250	240	330
3.20	3.136	3.264	60	90	70	110	200	250	240	330
3.25	3.185	3.315	60	90	70	110	200	250	240	330
3.30	3.234	3.366	60	90	70	110	200	250	240	330
3.35	3.283	3.417	60	90	70	110	200	250	240	330
3.40	3.332	3.468	60	90	70	110	200	250	240	330
3.45	3.381	3.519	60	90	70	110	200	250	240	330
3.50	3.430	3.570	60	90	70	110	200	250	240	330
3.55	3.479	3.621	60	90	70	110	200	250	240	330
3.60	3.528	3.672	60	90	70	110	200	250	240	330
3.65	3.577	3.723	60	90	70	110	200	250	240	330
3.70	3.626	3.774	60	90	70	110	200	250	240	330
3.75	3.675	3.825	60	90	70	110	200	250	240	330
3.80	3.724	3.876	60	90	70	110	200	250	240	330
3.85	3.773	3.927	60	90	70	110	200	250	240	330
3.90	3.822	3.978	60	90	70	110	200	250	240	330
3.95	3.871	4.029	60	90	70	110	200	250	240	330

■ELECTRICAL CHARACTERISTICS (Continued)

●Voltage Chart (Continued)

XC6204 series (Continued) Note: For the XC6204E, F, G, H series, see the item "Ta=25℃" only.

SYMBOL	E-0		E-1				E-2			
PARAMETER / SETTING OUTPUT VOLTAGE (V)	OUTPUT VOLTAGE (V) (2% products)		DROPOUT VOLTAGE 1 (mV) IOUT=30mA				DROPOUT VOLTAGE 2 (mV) IOUT=100mA			
VOUT(T)	VOUT		Vdif 1				Vdif 2			
			Ta = 25℃		-40℃≦Topr≦85℃		Ta = 25℃		-40℃≦Topr≦85℃	
	MIN.	MAX.	TYP.	MAX.	TYP.	MAX.	TYP.	MAX.	TYP.	MAX.
4.00	3.920	4.080	60	80	70	100	180	230	220	310
4.05	3.969	4.131	60	80	70	100	180	230	220	310
4.10	4.018	4.182	60	80	70	100	180	230	220	310
4.15	4.067	4.233	60	80	70	100	180	230	220	310
4.20	4.116	4.284	60	80	70	100	180	230	220	310
4.25	4.165	4.335	60	80	70	100	180	230	220	310
4.30	4.214	4.386	60	80	70	100	180	230	220	310
4.35	4.263	4.437	60	80	70	100	180	230	220	310
4.40	4.312	4.488	60	80	70	100	180	230	220	310
4.45	4.361	4.539	60	80	70	100	180	230	220	310
4.50	4.410	4.590	60	80	70	100	180	230	220	310
4.55	4.459	4.641	60	80	70	100	180	230	220	310
4.60	4.508	4.692	60	80	70	100	180	230	220	310
4.65	4.557	4.743	60	80	70	100	180	230	220	310
4.70	4.606	4.794	60	80	70	100	180	230	220	310
4.75	4.655	4.845	60	80	70	100	180	230	220	310
4.80	4.704	4.896	60	80	70	100	180	230	220	310
4.85	4.753	4.947	60	80	70	100	180	230	220	310
4.90	4.802	4.998	60	80	70	100	180	230	220	310
4.95	4.851	5.049	60	80	70	100	180	230	220	310
5.00	4.900	5.100	50	70	60	90	160	210	200	290
5.05	4.949	5.151	50	70	60	90	160	210	200	290
5.10	4.998	5.202	50	70	60	90	160	210	200	290
5.15	5.047	5.253	50	70	60	90	160	210	200	290
5.20	5.096	5.304	50	70	60	90	160	210	200	290
5.25	5.145	5.355	50	70	60	90	160	210	200	290
5.30	5.194	5.406	50	70	60	90	160	210	200	290
5.35	5.243	5.457	50	70	60	90	160	210	200	290
5.40	5.292	5.508	50	70	60	90	160	210	200	290
5.45	5.341	5.559	50	70	60	90	160	210	200	290
5.50	5.390	5.610	50	70	60	90	160	210	200	290
5.55	5.439	5.661	50	70	60	90	160	210	200	290
5.60	5.488	5.712	50	70	60	90	160	210	200	290
5.65	5.537	5.763	50	70	60	90	160	210	200	290
5.70	5.586	5.814	50	70	60	90	160	210	200	290
5.75	5.635	5.865	50	70	60	90	160	210	200	290
5.80	5.684	5.916	50	70	60	90	160	210	200	290
5.85	5.733	5.967	50	70	60	90	160	210	200	290
5.90	5.782	6.018	50	70	60	90	160	210	200	290
5.95	5.831	6.069	50	70	60	90	160	210	200	290
6.00	5.880	6.120	50	70	60	90	160	210	200	290

■ELECTRICAL CHARACTERISTICS (Continued)

●Voltage Chart (Continued)

XC6204 series, 1% products

Note:±1% output voltage accuracy products are available for the XC6204E~H series from VOUT=2.95V.

SYMBOL	E-0	
PARAMETER / SETTING OUTPUT VOLTAGE (V)	OUTPUT VOLTAGE (V) (1% products)	
VOUT (T)	VOUT	
	MIN.	MAX.
2.95	2.921	2.980
3.00	2.970	3.030
3.05	3.020	3.081
3.10	3.069	3.131
3.15	3.119	3.182
3.20	3.168	3.232
3.25	3.218	3.283
3.30	3.267	3.333
3.35	3.317	3.384
3.40	3.366	3.434
3.45	3.416	3.485
3.50	3.465	3.535
3.55	3.515	3.586
3.60	3.564	3.636
3.65	3.614	3.687
3.70	3.663	3.737
3.75	3.713	3.788
3.80	3.762	3.838
3.85	3.812	3.889
3.90	3.861	3.939
3.95	3.911	3.990
4.00	3.960	4.040
4.05	4.010	4.091
4.10	4.059	4.141
4.15	4.109	4.192
4.20	4.158	4.242
4.25	4.208	4.293
4.30	4.257	4.343
4.35	4.307	4.394
4.40	4.356	4.444
4.45	4.405	4.494
4.50	4.455	4.545

SYMBOL	E-0	
PARAMETER / SETTING OUTPUT VOLTAGE (V)	OUTPUT VOLTAGE (V) (1% products)	
VOUT (T)	VOUT	
	MIN.	MAX.
4.55	4.505	4.596
4.60	4.554	4.646
4.65	4.604	4.697
4.70	4.653	4.747
4.75	4.703	4.798
4.80	4.752	4.848
4.85	4.802	4.899
4.90	4.851	4.949
4.95	4.901	5.000
5.00	4.950	5.050
5.05	5.000	5.101
5.10	5.049	5.151
5.15	5.099	5.202
5.20	5.148	5.252
5.25	5.198	5.303
5.30	5.247	5.353
5.35	5.297	5.404
5.40	5.346	5.454
5.45	5.396	5.505
5.50	5.445	5.555
5.55	5.495	5.606
5.60	5.544	5.656
5.65	5.594	5.707
5.70	5.643	5.757
5.75	5.693	5.808
5.80	5.742	5.858
5.85	5.792	5.909
5.90	5.841	5.959
5.95	5.891	6.010
6.00	5.940	6.060

■ELECTRICAL CHARACTERISTICS (Continued)

●Voltage Chart (Continued)

XC6205 series

SYMBOL	E-0		E-1		E-2	
PARAMETER / SETTING OUTPUT VOLTAGE (V)	OUTPUT VOLTAGE (V)		DROPOUT VOLTAGE1 (mV) IOUT=30mA		DROPOUT VOLTAGE 2 (mV) IOUT=100mA	
VOUT (T)	VOUT		Ta = 25℃			
			Vdif 1		Vdif 2	
	MIN.	MAX.	TYP.	MAX.	TYP.	MAX.
0.90	0.870	0.930	1050	1100	1150	1200
0.95	0.920	0.980	1050	1100	1150	1200
1.00	0.970	1.030	1000	1100	1050	1200
1.05	1.020	1.080	1000	1100	1050	1200
1.10	1.070	1.130	900	1000	950	1100
1.15	1.120	1.180	900	1000	950	1100
1.20	1.170	1.230	800	900	850	1000
1.25	1.220	1.280	800	900	850	1000
1.30	1.270	1.330	700	800	750	900
1.35	1.320	1.380	700	800	750	900
1.40	1.370	1.430	600	700	650	800
1.45	1.420	1.480	600	700	650	800
1.50	1.470	1.530	500	600	550	700
1.55	1.519	1.581	500	600	550	700
1.60	1.568	1.632	400	500	500	600
1.65	1.617	1.683	400	500	500	600
1.70	1.666	1.734	300	400	400	500
1.75	1.715	1.785	300	400	400	500

●Specification Chart by Series

SYMBOL	S-1		S-2	S-3
PRODUCT SERIES	SUPPLY CURRENT (μA)		CE "H" CURRENT (μA)	CE "L" CURRENT (μA)
	MIN.	MAX.		
XC6205A	52.0	115.0	18.0	-0.1
XC6205B	42.0	95.0	0.1	-0.1
XC6205C	52.0	115.0	0.1	-18.0
XC6205D	42.0	95.0	0.1	-0.1

●Specification & Condition by Series

SYMBOL	E-5	E-4
SPECIFIED OUTPUT VOLTAGE (V)	INPUT VOLTAGE (V)	MAXIMUM OUTPUT CURRENT (mA)
	VIN	MIN.
0.90～0.95	2.5	260
1.00～1.05	2.5	260
1.10～1.15	2.6	270
1.20～1.25	2.7	290
1.30～1.35	2.8	300
1.40～1.45	2.9	
1.50～1.75	3.0	

* VOUT(T)=Specified output voltage

■TYPICAL APPLICATION CIRCUIT

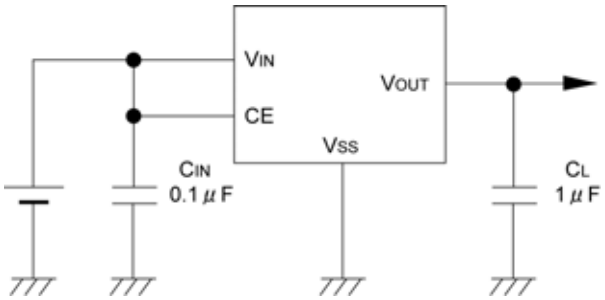

■OPERATIONAL EXPLANATION

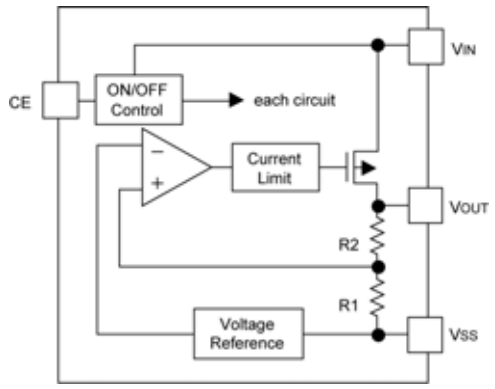

Output voltage control with the XC6204/6205 series:

The voltage divided by resistors R1 & R2 is compared with the internal reference voltage by the error amplifier.

The P-channel MOSFET, which is connected to the VOUT pin, is then driven by the subsequent output signal. The output voltage at the VOUT pin is controlled & stabilized by a system of negative feedback.

The current limit circuit and short protect circuit operate in relation to the level of output current. Further, the IC's internal circuitry can be shutdown via the CE pin's signal.

< Low ESR Capacitors >

With the XC6204/05 series, a stable output voltage is achievable even if used with a low ESR capacitor as a phase compensation circuit is built-in. In order to ensure the effectiveness of the phase compensation, we suggest that an output capacitor (CL) is connected as close as possible to the output pin (VOUT) and the VSS pin. Please use an output capacitor with a capacitance value of at least 1μF. Also, please connect an input capacitor (CIN) of 0.1μF between the VIN pin and the VSS pin in order to ensure a stable power input.

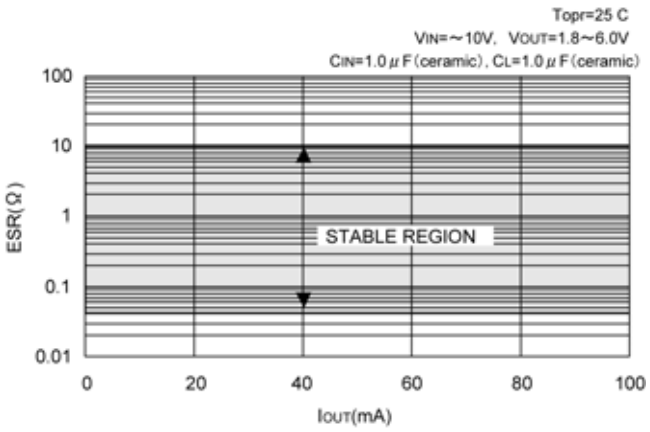

● Recommended output capacitor values

VOUT	0.9V ~ 1.2V	1.25V ~ 1.75V
CL	4.7μF	2.2μF

■OPERATIONAL EXPLANATION (Continued)

<Current Limiter, Short-Circuit Protection>

The XC6204/05 series includes a combination of a fixed current limiter circuit & a foldback circuit, which aid the operations of the current limiter and circuit protection. When the load current reaches the current limit level, the fixed current limiter circuit operates and output voltage drops. As a result of this drop in output voltage, the foldback circuit operates, output voltage drops further and output current decreases. When the output pin is shorted, a current of about 50mA flows. However, when the input/output voltage differential is quite small, this current will be about 200mA.

<CE Pin>

The IC's internal circuitry can be shutdown via the signal from the CE pin with the XC6204/05 series. In shutdown mode, output at the VOUT pin will be pulled down to the VSS level via R1 & R2. The operational logic of the IC's CE pin is selectable (please refer to the selection guide). Note that as the standard XC6204/05B type is *' High Active/No Pull Down'*, operations will become unstable with the CE pin open. Although the CE pin is equal to an inverter input with CMOS hysteresis, with either the pull-up or pull-down options, the CE pin input current will increase when the IC is in operation.

We suggest that you use this IC with either a VIN voltage or a VSS voltage input at the CE pin. If this IC is used with the correct specifications for the CE pin, the operational logic is fixed and the IC will operate normally. However, supply current may increase as a result of through current in the IC's internal circuitry if a voltage between 0.25V and 1.5V is input.

<Minimum Operating Voltage>

In order to stabilize the IC's operations, an input voltage of more than 2.0V is needed. Should the input voltage be less than 2.0V, the output voltage may not be regulated correctly. (Please refer to Input Voltage vs. Output Voltage characteristics below.)

① When VIN is less than 2.0V, the CE pin remains in stand-by mode.
When VIN rises above 2.0V, the power supply will turn ON.

② The input power supply will begin to rise after a few hundred msec.
(Please also refer to the transient response characteristics.)

○ Input Voltage vs. Output Voltage

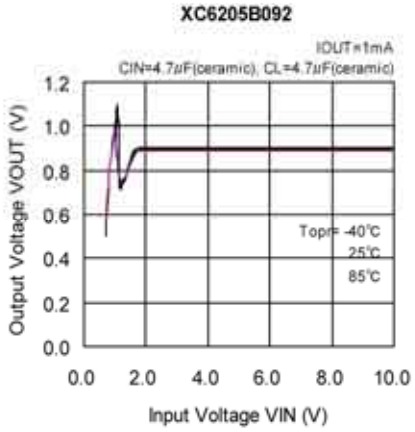

○ Enable Response Time

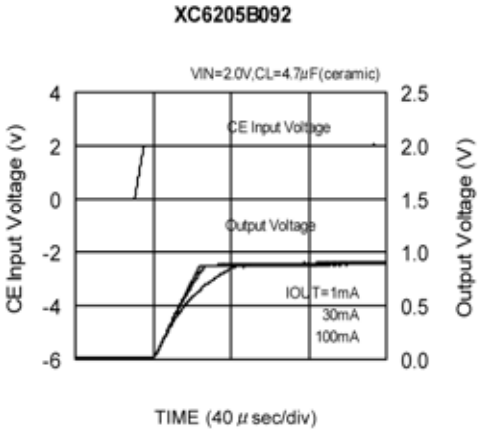

○ Turn-ON Response Time

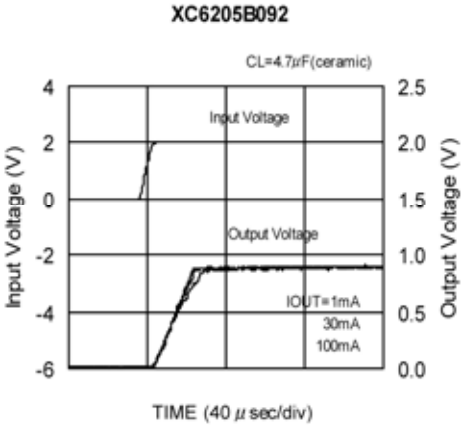

■NOTES ON USE

1. Please use this IC within the stated absolute maximum ratings. The IC is liable to malfunction should the ratings be exceeded.
2. Where wiring impedance is high, operations may become unstable due to noise and/or phase lag depending on output current. Please strengthen VIN and VSS wiring in particular.
3. Please wire the input capacitor (CIN) and the output capacitor (CL) as close to the IC as possible.

■TEST CIRCUITS

Circuit 1

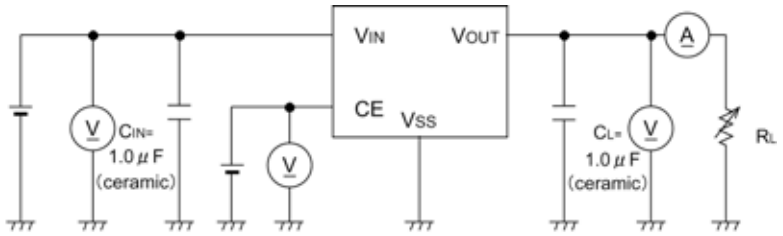

Circuit 2

1 : S

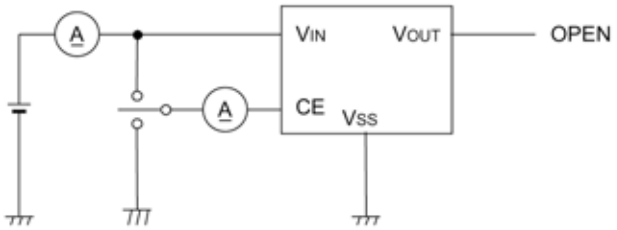

Circuit 3

1 : S

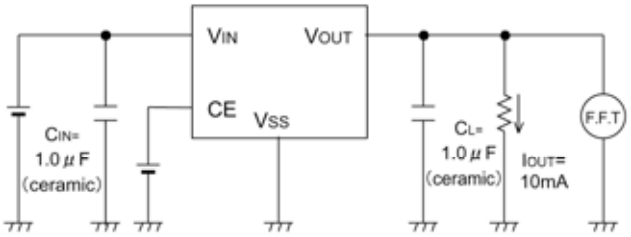

Circuit 4

1 : Su

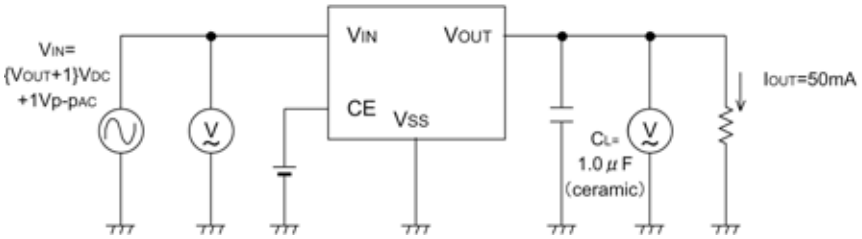

■TYPICAL PERFORMANCE CHARACTERISTICS

●XC6204

(1) Output Voltage vs. Output Current

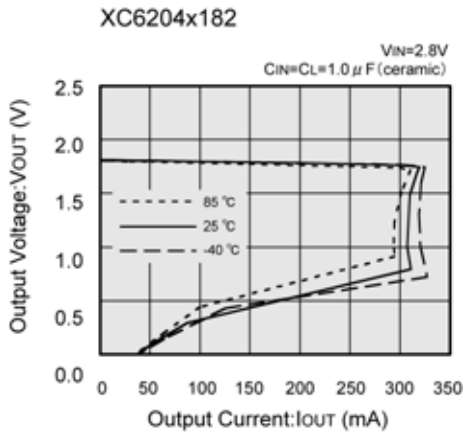

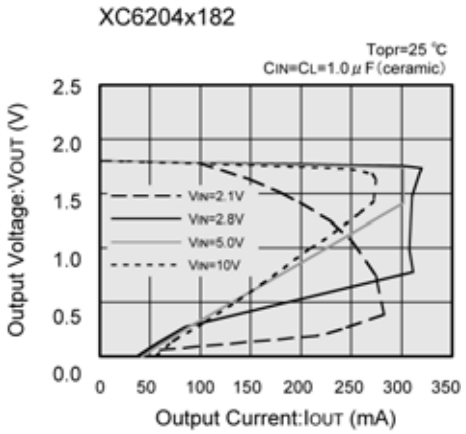

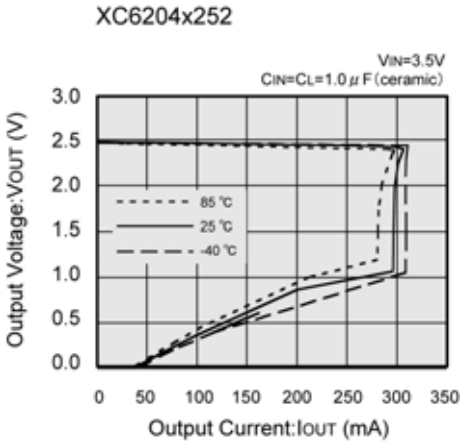

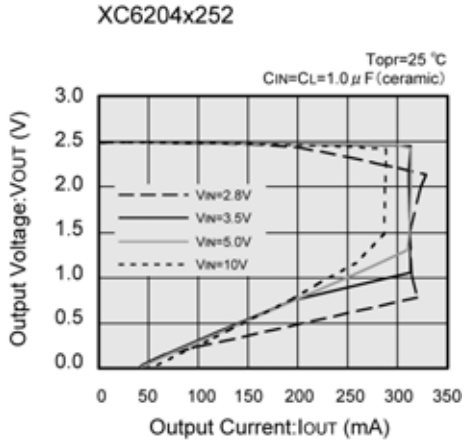

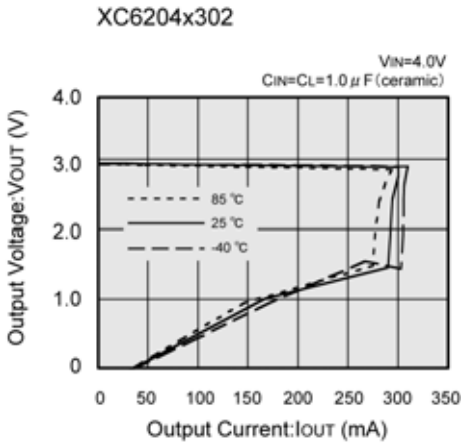

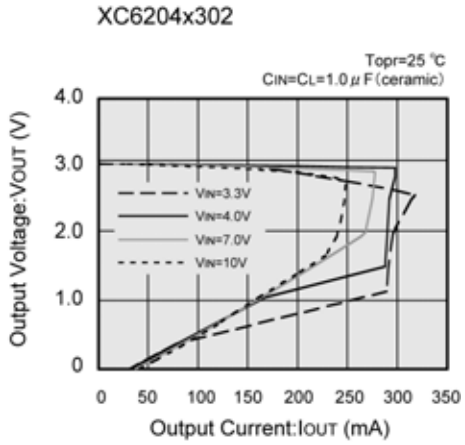

■TYPICAL PERFORMANCE CHARACTERISTICS (Continued)

●XC6204 (Continued)

(1) Output Voltage vs. Output Current (Continued)

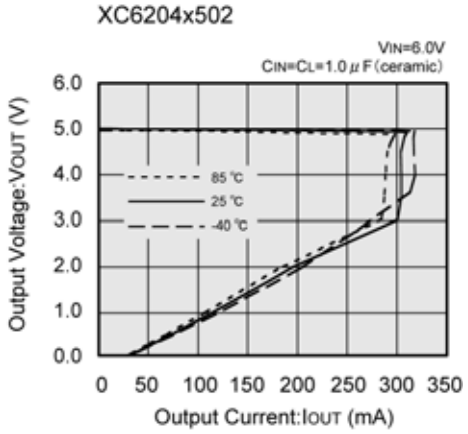

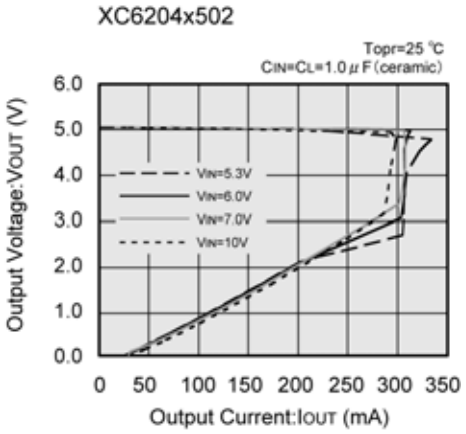

(2) Output Voltage vs. Input Voltage

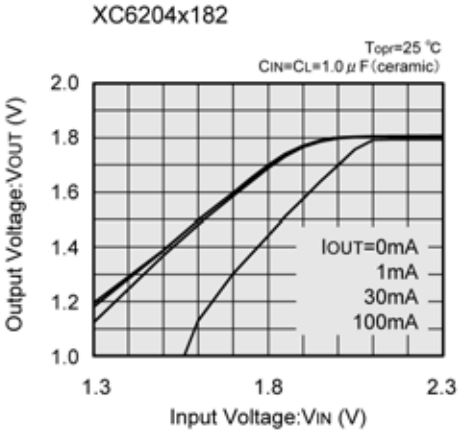

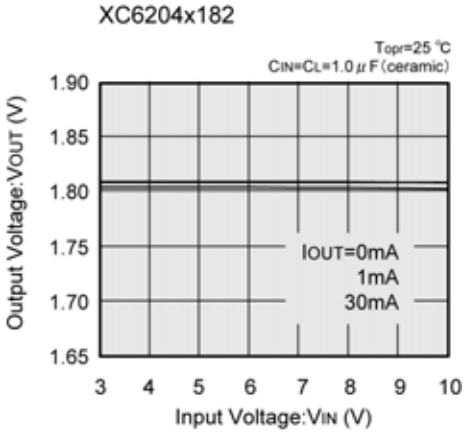

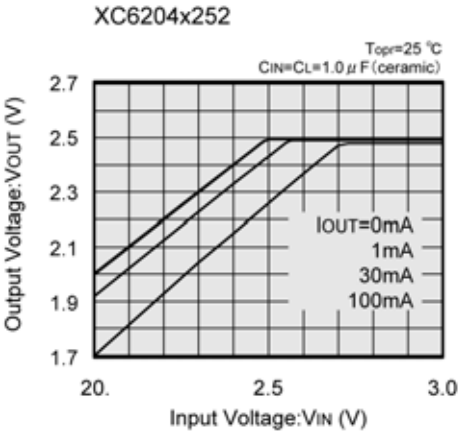

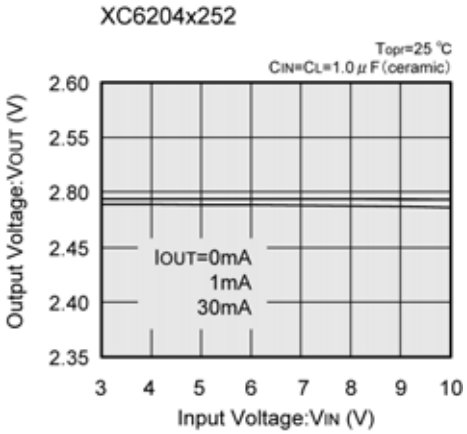

■TYPICAL PERFORMANCE CHARACTERISTICS (Continued)

●XC6204 (Continued)

(2) Output Voltage vs. Input Voltage (Continued)

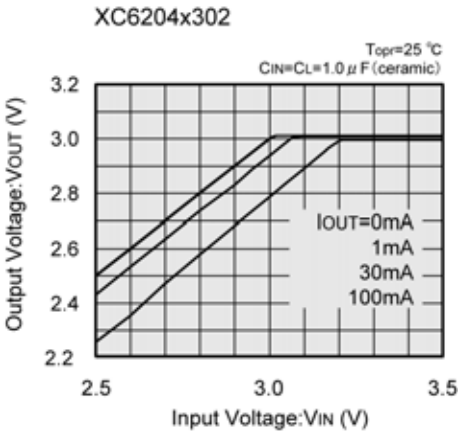

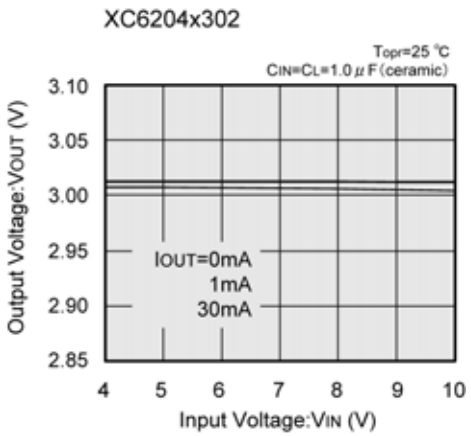

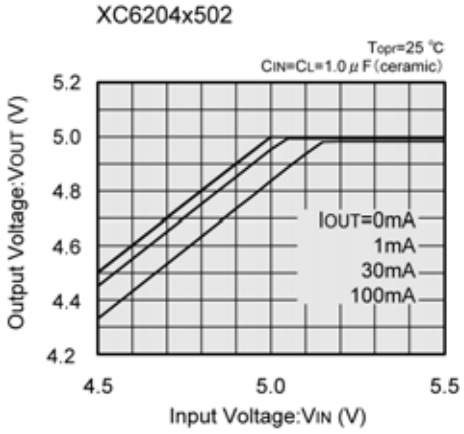

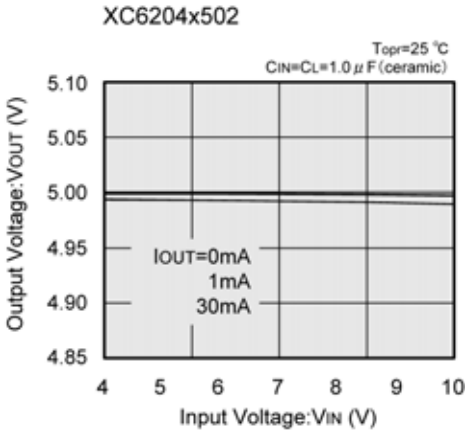

(3) Dropout Voltage vs. Output Current

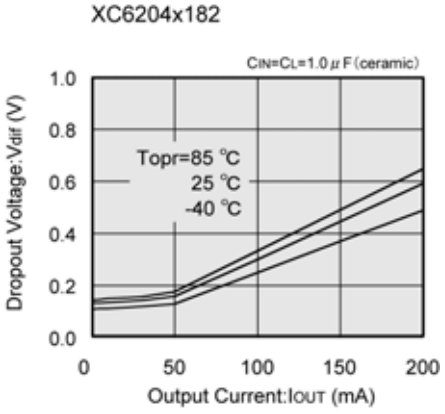

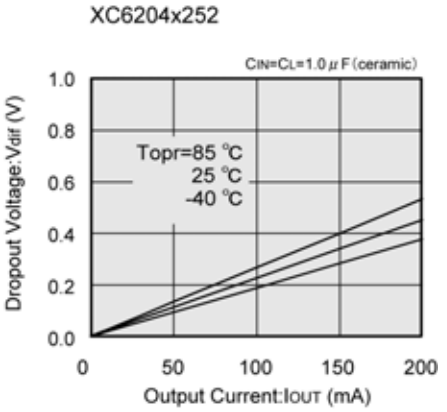

■TYPICAL PERFORMANCE CHARACTERISTICS (Continued)

●XC6204 (Continued)

(3) Dropout Voltage vs. Output Current (Continued)

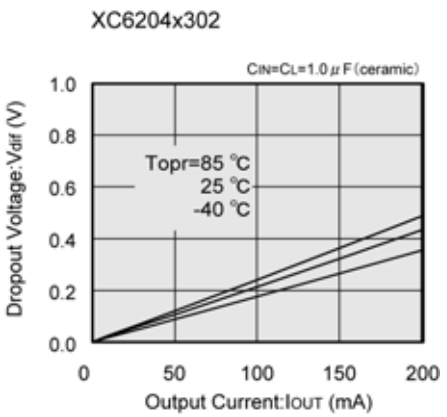

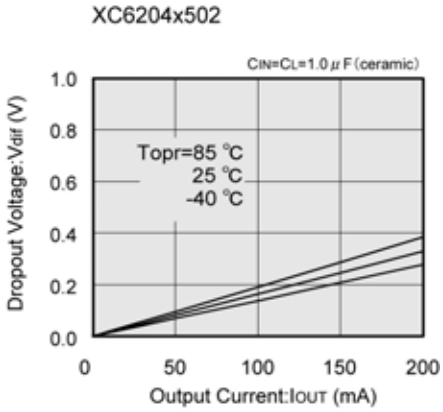

* Since the operation of this IC is only guaranteed from V_{IN}=2.0V and above, it is essential that when using with applications where V_{OUT}=2.0V or less, the difference between V_{IN} and V_{OUT} be at least equal to 2V – $V_{OUT(T)}$.

(4) Supply Current vs. Input Voltage

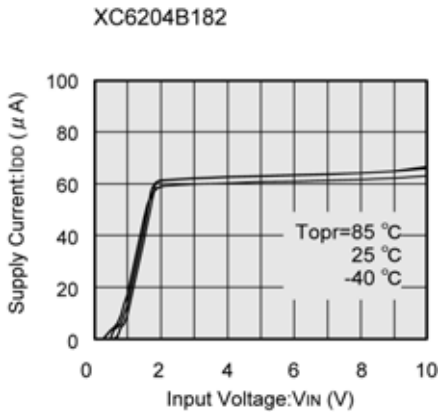

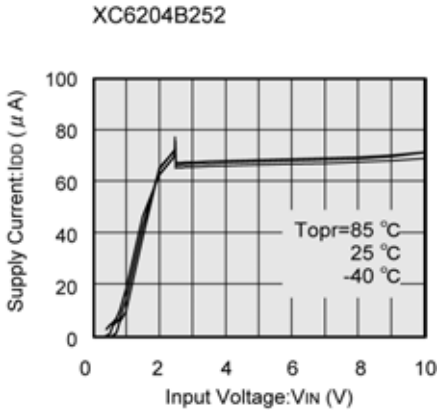

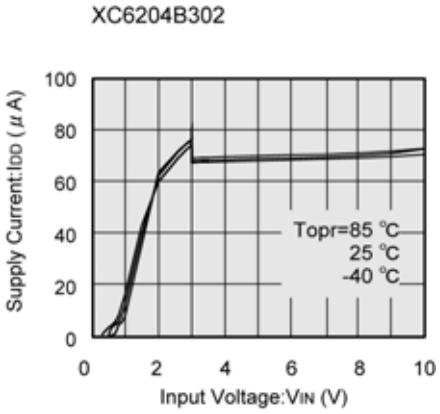

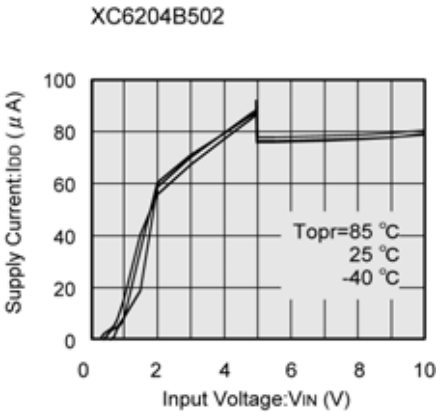

■TYPICAL PERFORMANCE CHARACTERISTICS (Continued)

●XC6204 (Continued)

(5) Output Voltage vs. Ambient Temperature

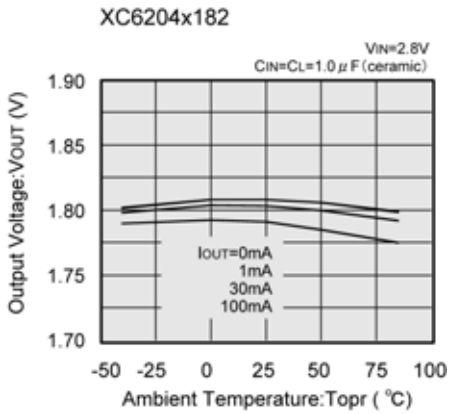

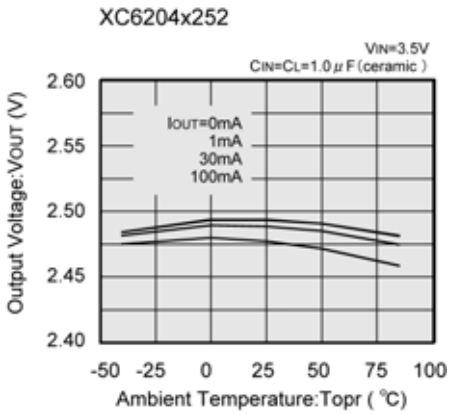

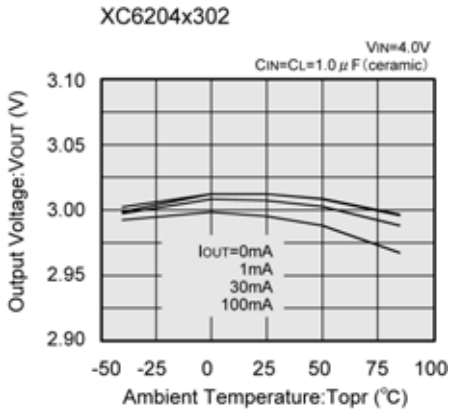

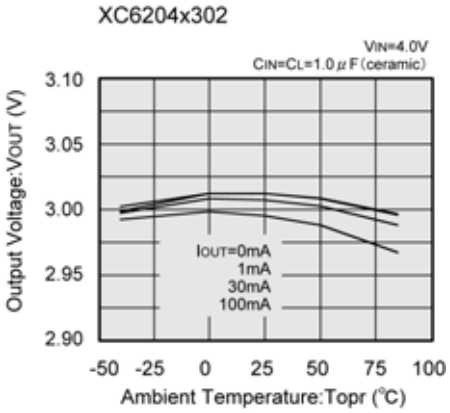

(6) Supply Current vs. Ambient Temperature

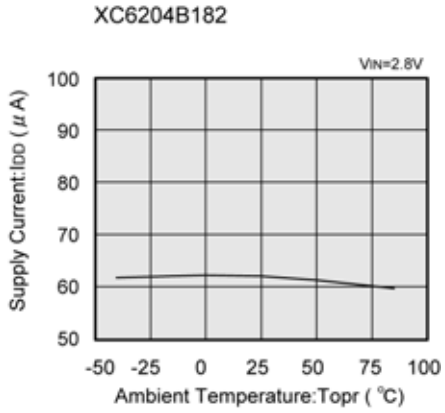

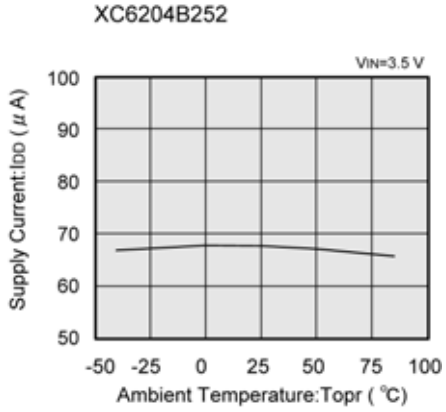

■TYPICAL PERFORMANCE CHARACTERISTICS (Continued)

●XC6204 (Continued)

(6) Supply Current vs. Ambient Temperature (Continued)

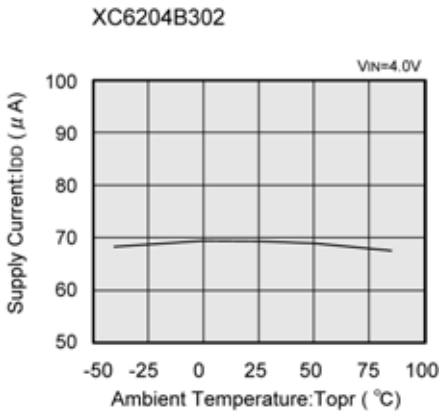

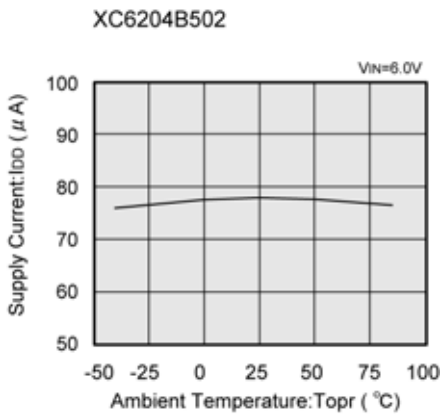

(7) CE Pin Threshold Voltage vs. Ambient Temperature

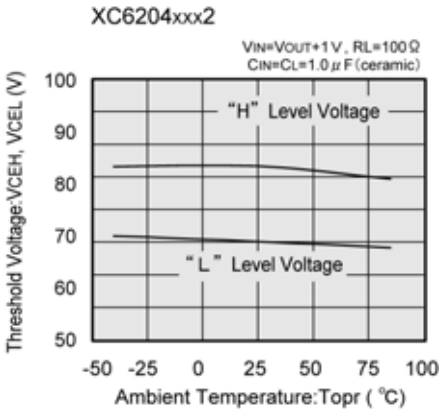

(8) Input Transient Response

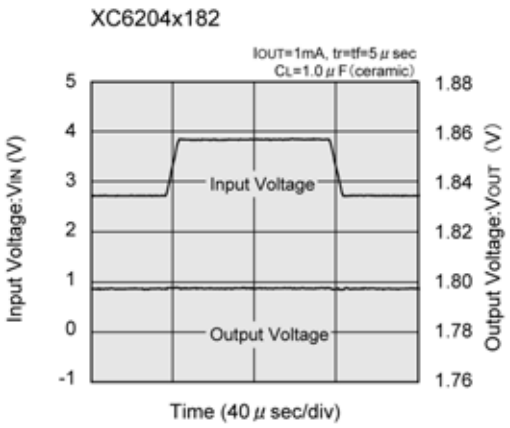

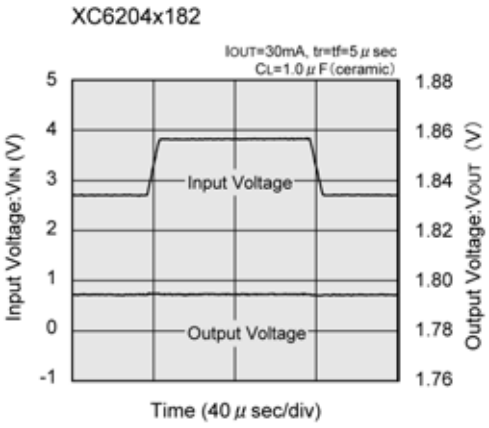

■TYPICAL PERFORMANCE CHARACTERISTICS (Continued)

●XC6204 (Continued)

(8) Input Transient Response (Continued)

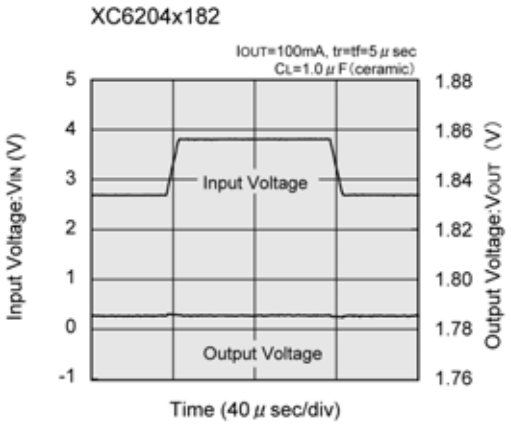

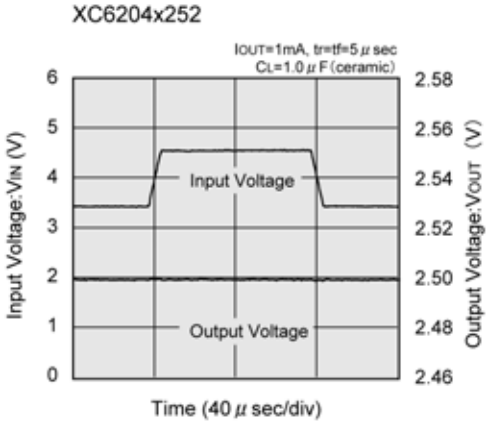

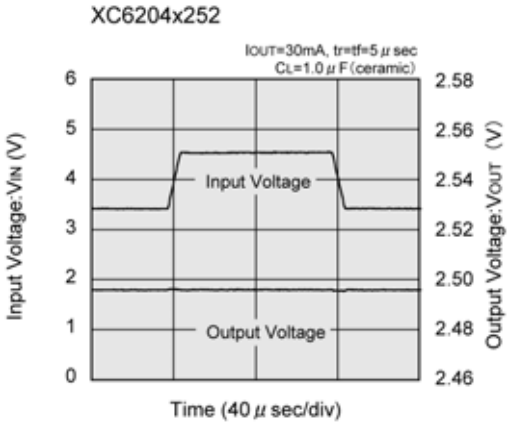

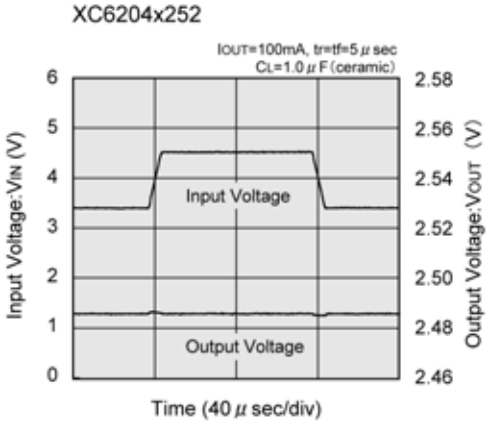

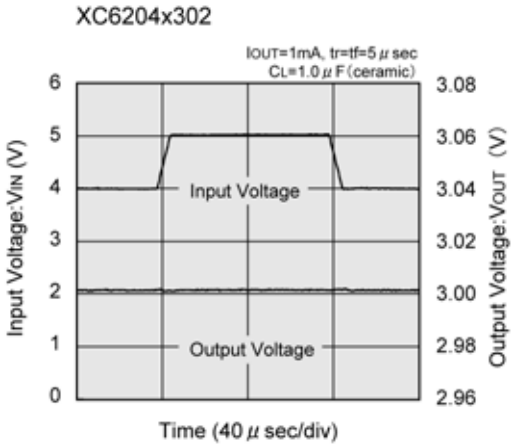

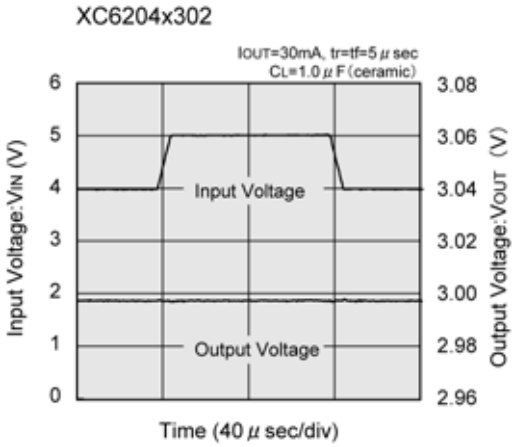

■TYPICAL PERFORMANCE CHARACTERISTICS (Continued)

●XC6204 (Continued)

(8) Input Transient Response (Continued)

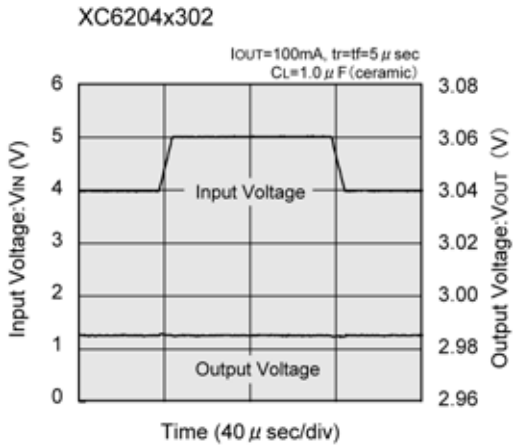

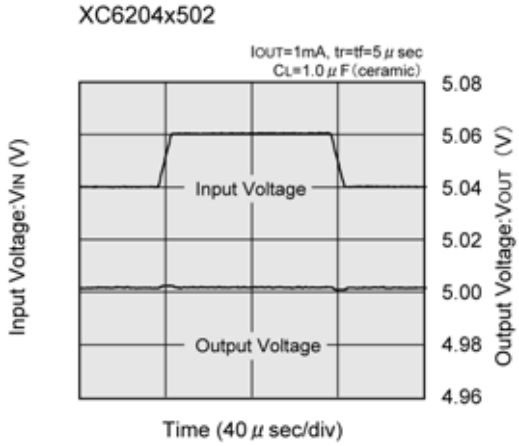

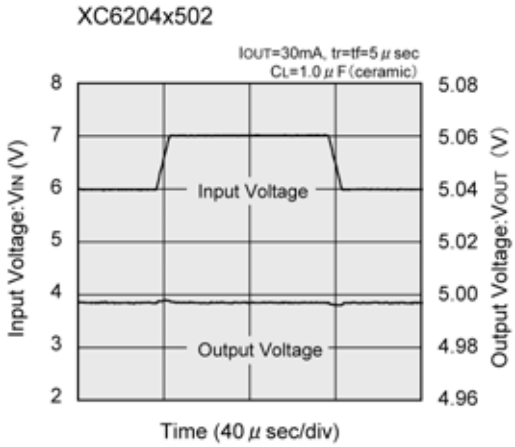

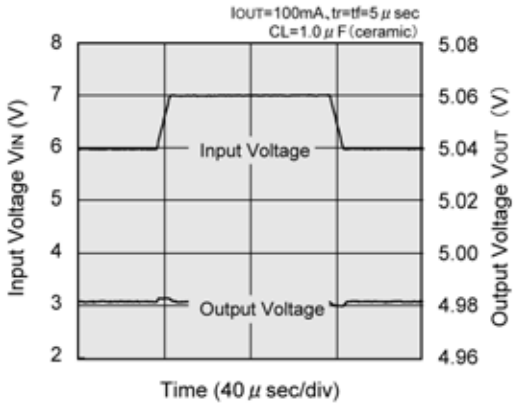

(9) Load Transient Response

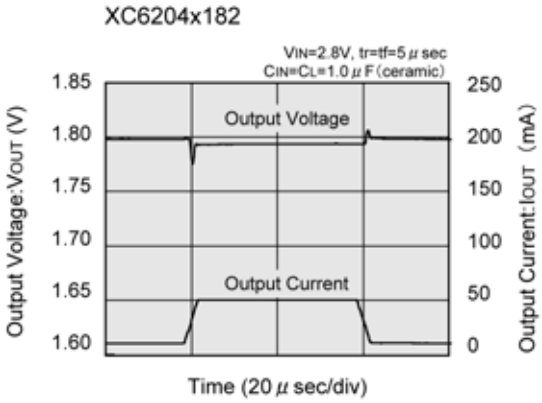

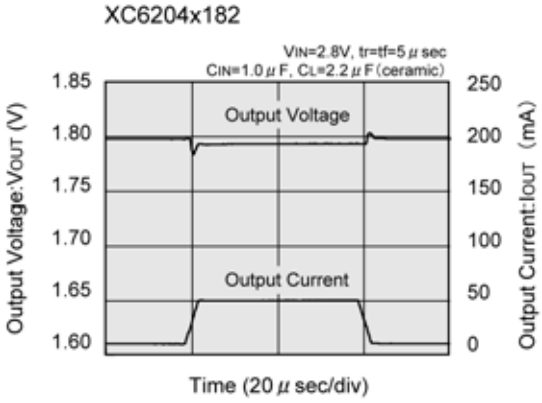

■TYPICAL PERFORMANCE CHARACTERISTICS (Continued)

●XC6204 (Continued)

(9) Load Transient Response (Continued)

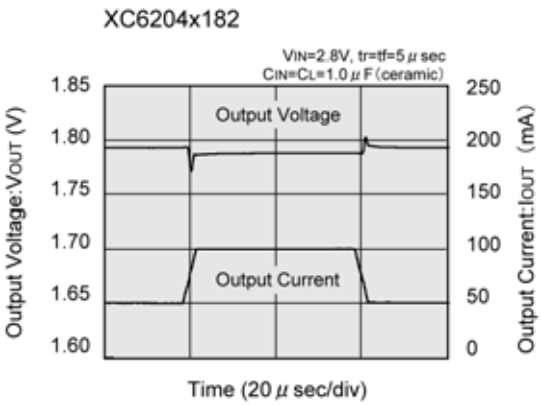

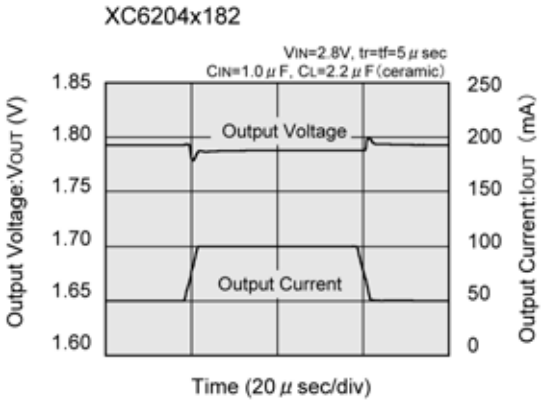

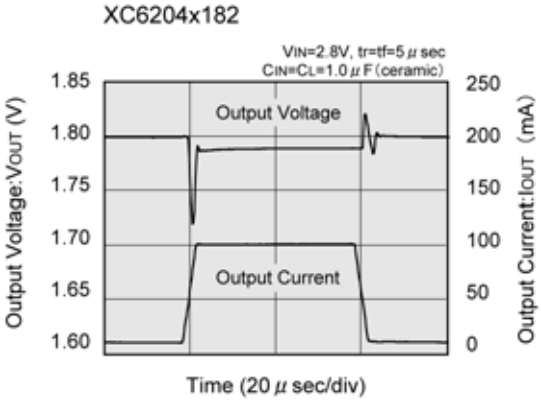

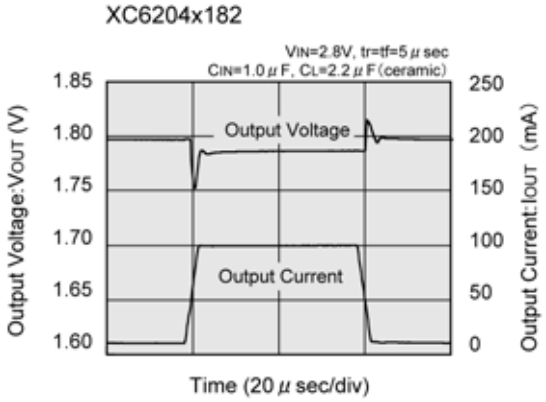

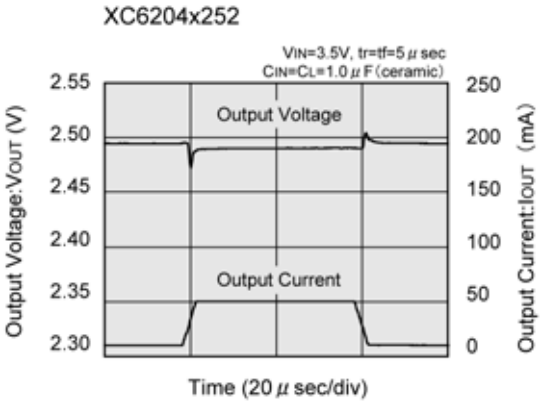

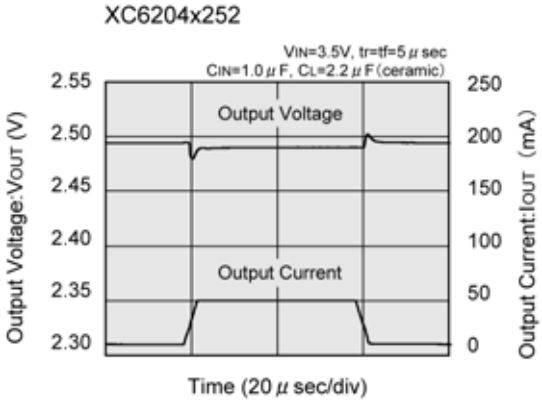

■TYPICAL PERFORMANCE CHARACTERISTICS (Continued)

●XC6204 (Continued)

(9) Load Transient Response (Continued)

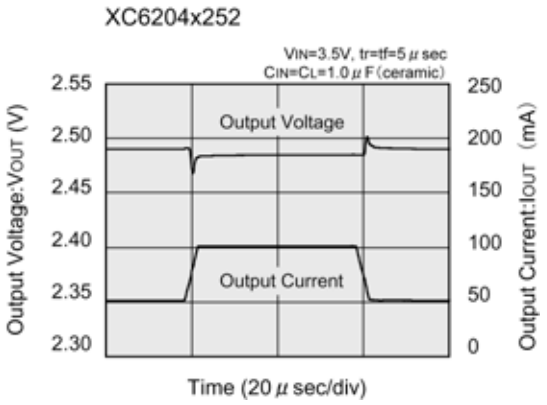

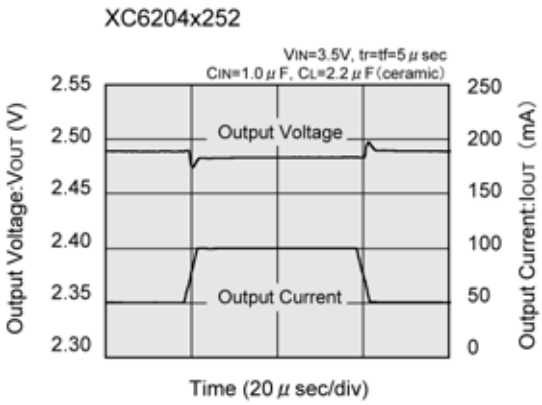

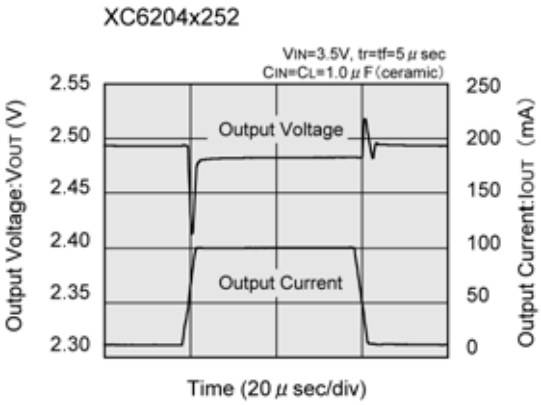

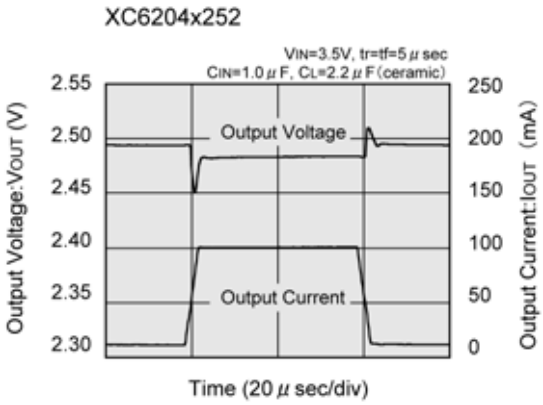

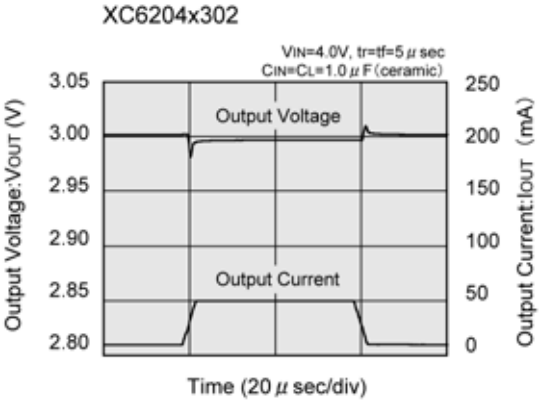

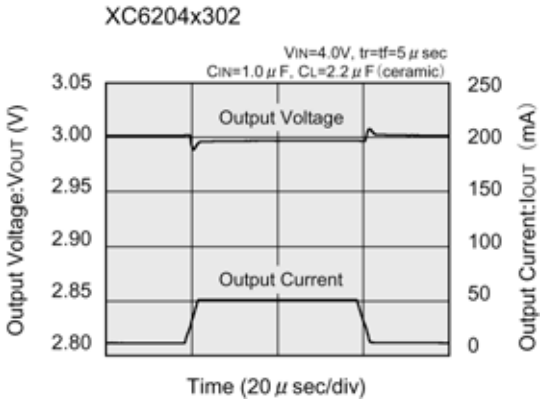

■TYPICAL PERFORMANCE CHARACTERISTICS (Continued)

●XC6204 (Continued)

(9) Load Transient Response (Continued)

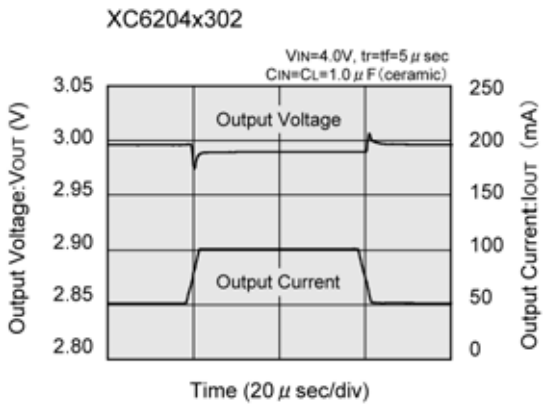

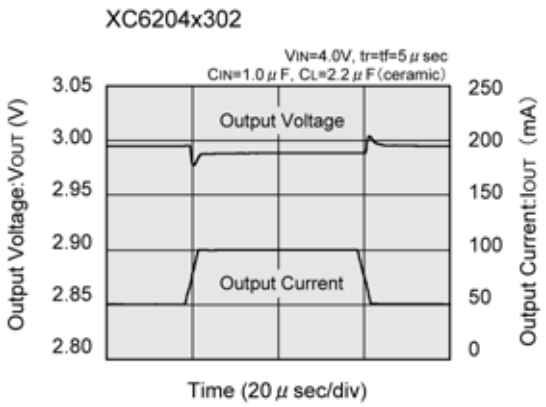

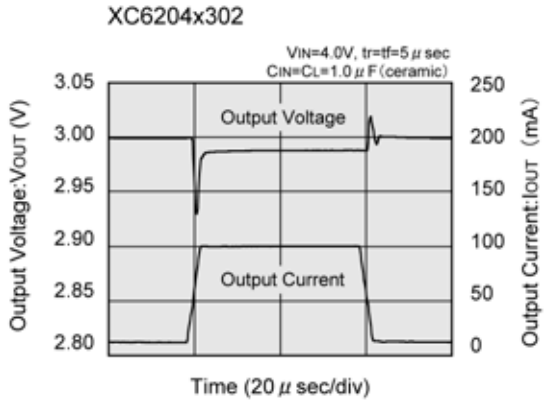

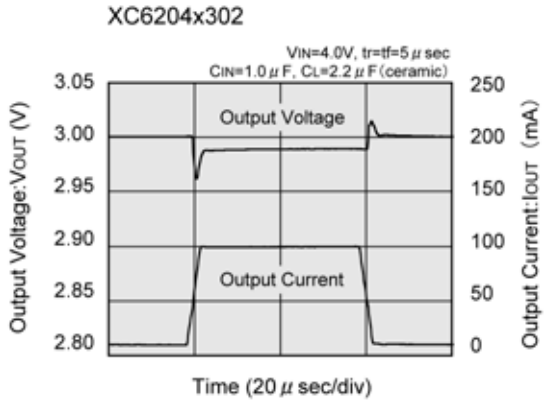

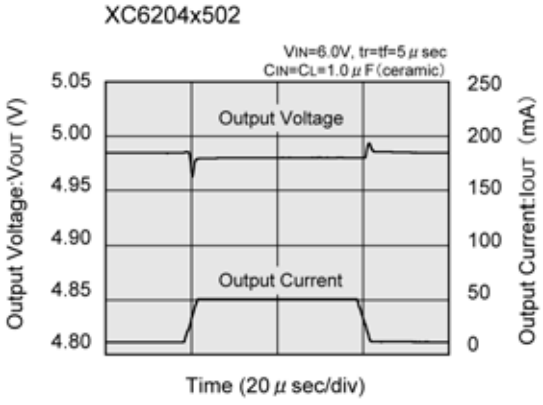

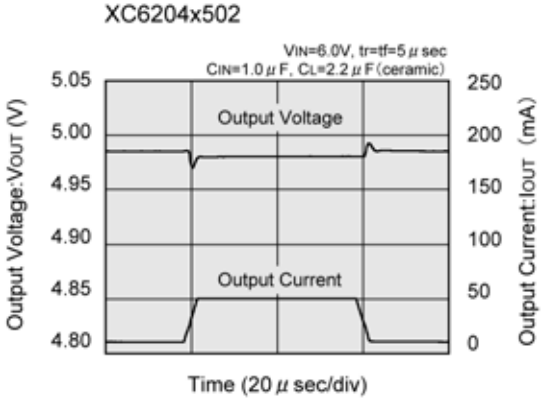

■TYPICAL PERFORMANCE CHARACTERISTICS (Continued)

●XC6204 (Continued)

(9) Load Transient Response (Continued)

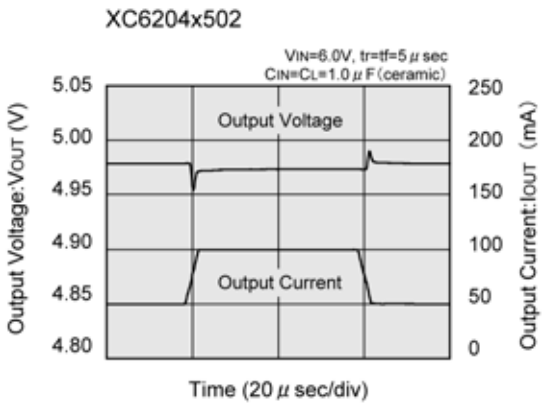

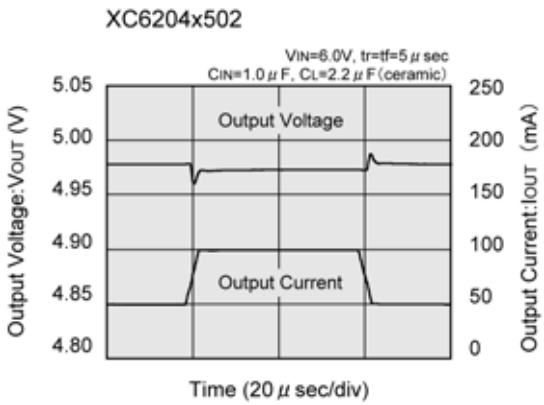

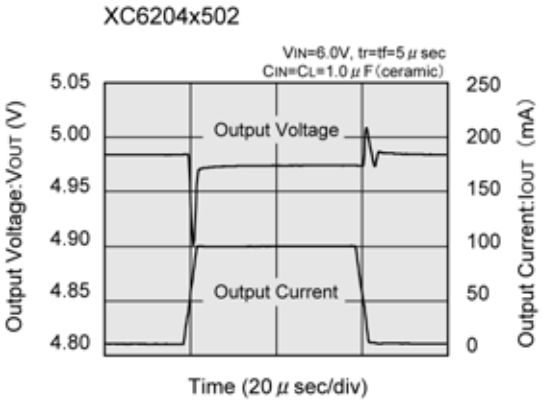

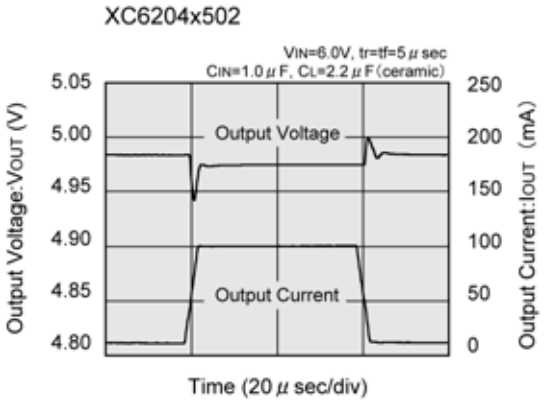

(10) Turn-On Response Time

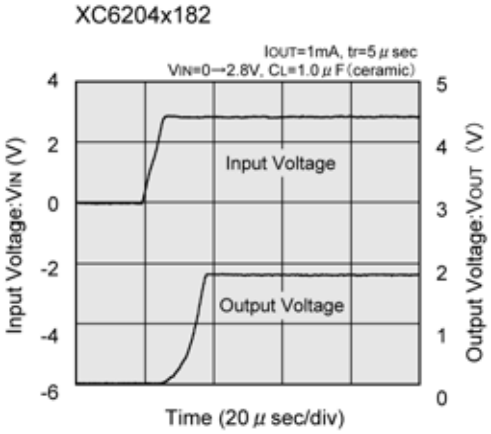

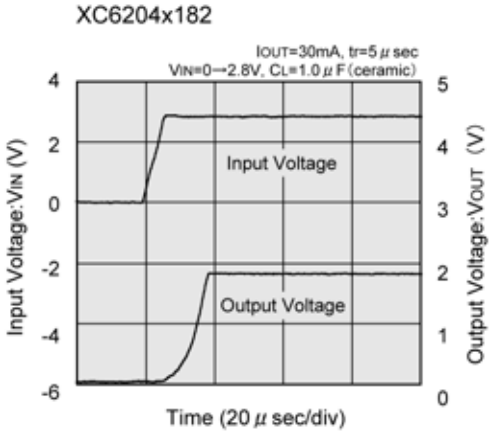

■TYPICAL PERFORMANCE CHARACTERISTICS (Continued)

●XC6204 (Continued)

(10) Turn-On Response Time

XC6204x182

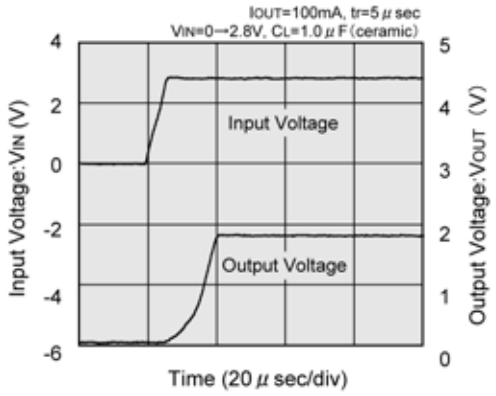

XC6204x252

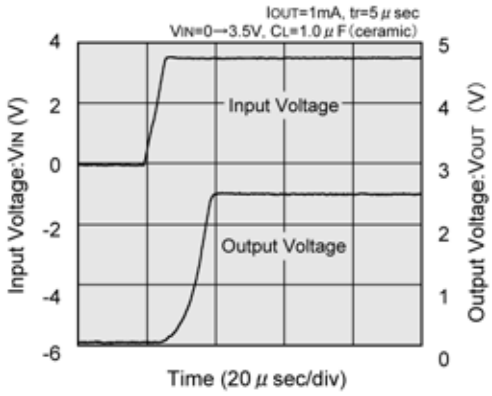

XC6204x252

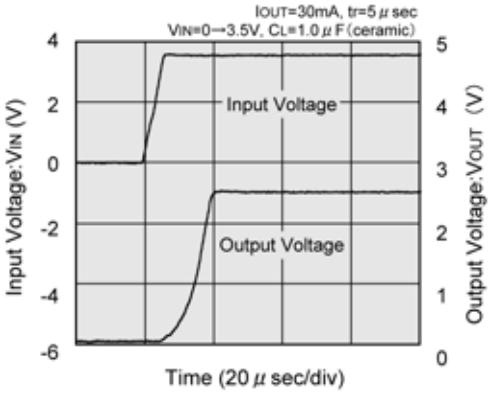

XC6204x252

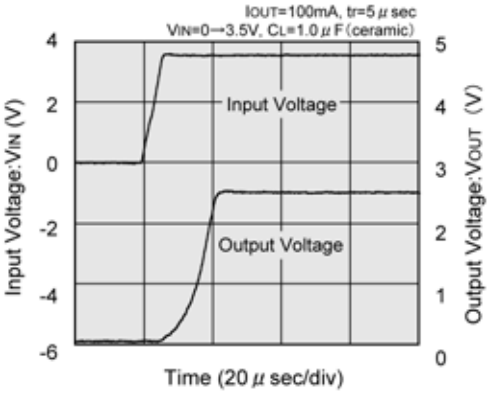

XC6204x302

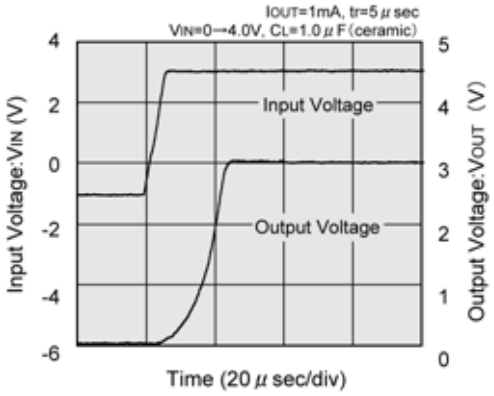

XC6204x302

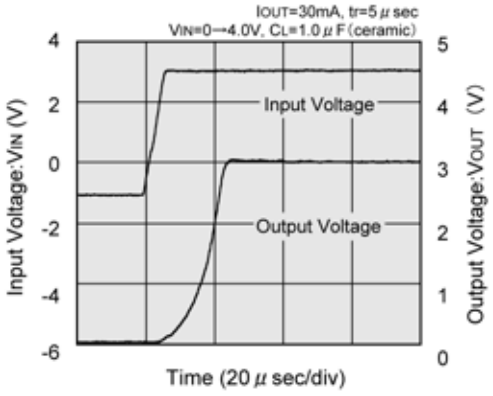

■TYPICAL PERFORMANCE CHARACTERISTICS (Continued)

●XC6204 (Continued)

(10) Turn-On Response Time (Continued)

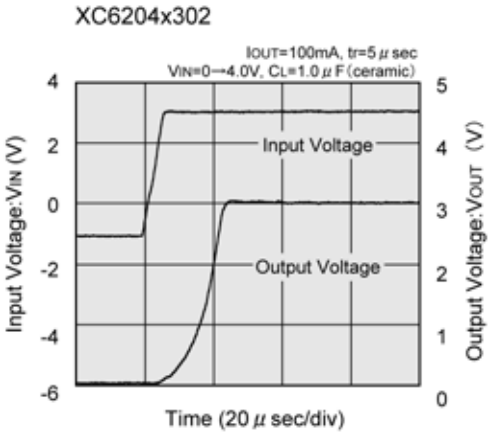

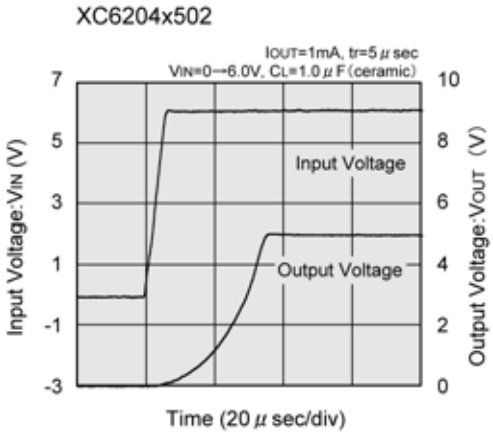

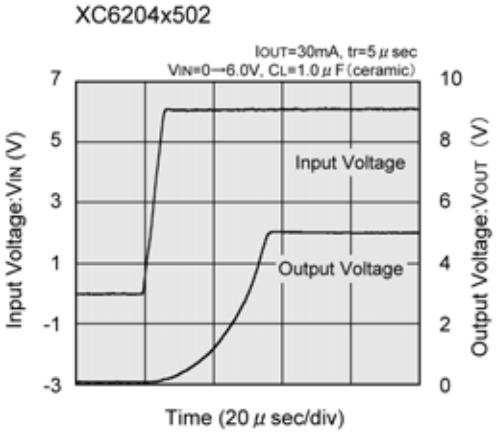

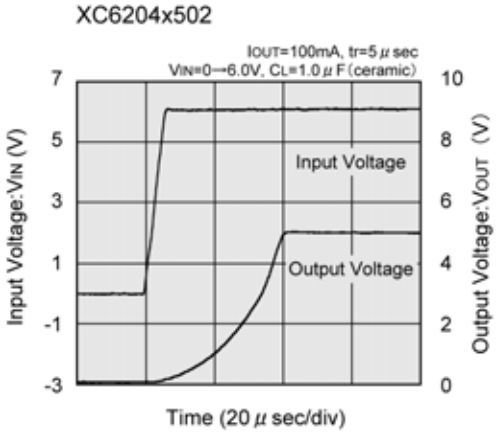

(11) Enable Response Time

(These characteristics will not be affected by the nature of the CE pin's logic)

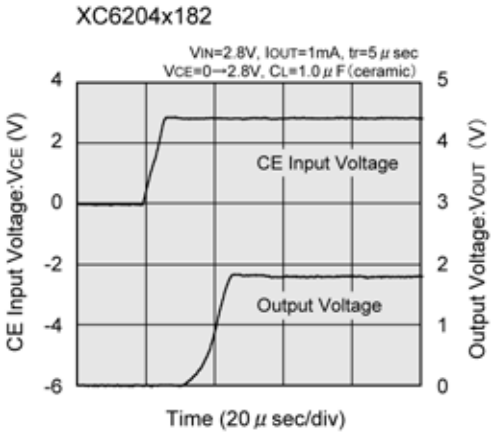

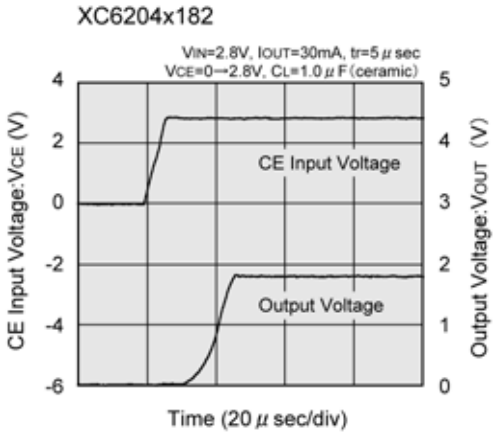

■TYPICAL PERFORMANCE CHARACTERISTICS (Continued)

●XC6204 (Continued)

(11) Enable Response Time (Continued)

(These characteristics will not be affected by the nature of the CE pin's logic)

XC6204x182

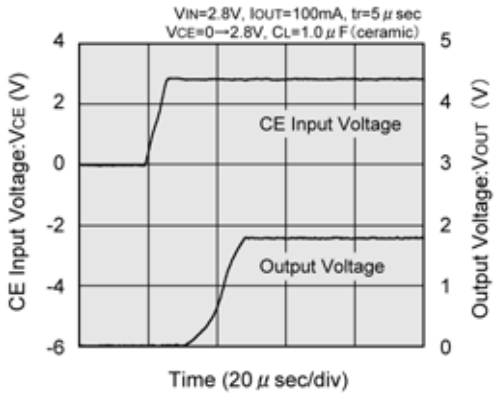

XC6204x252

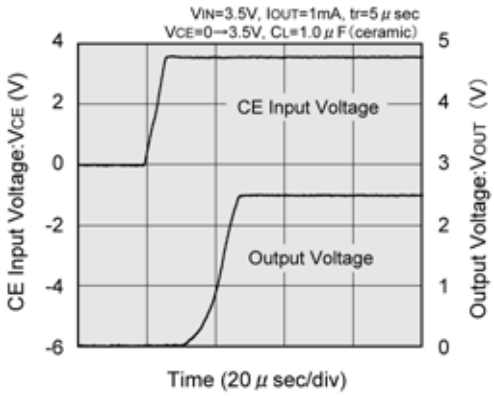

XC6204x252

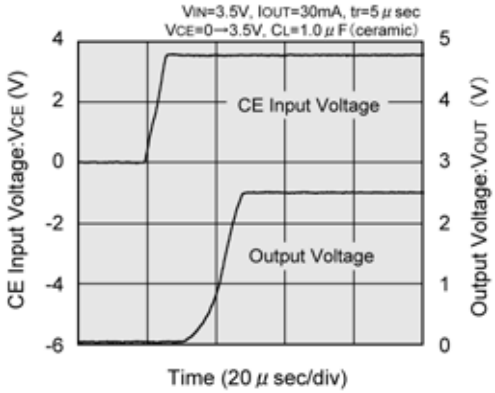

XC6204x252

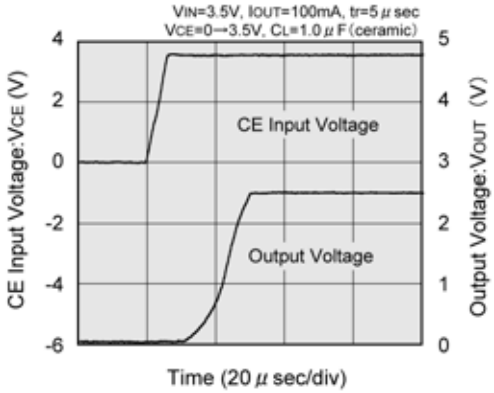

XC6204x302

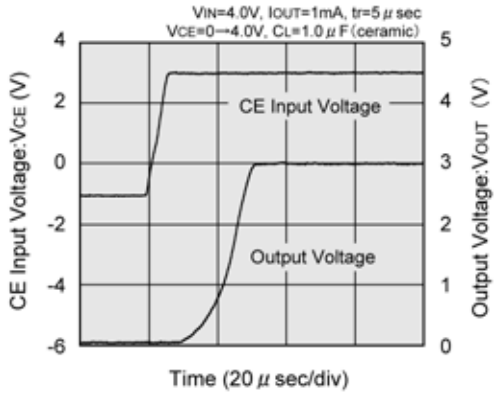

XC6204x302

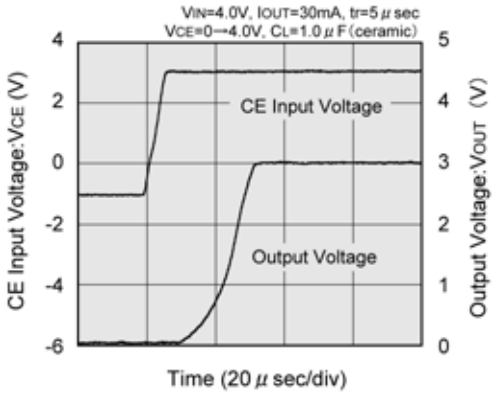

■TYPICAL PERFORMANCE CHARACTERISTICS (Continued)

●XC6204 (Continued)

(11) Enable Response Time (Continued)

(These characteristics will not be affected by the nature of the CE pin's logic)

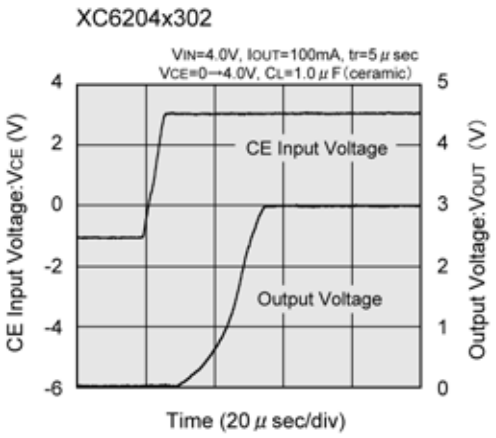

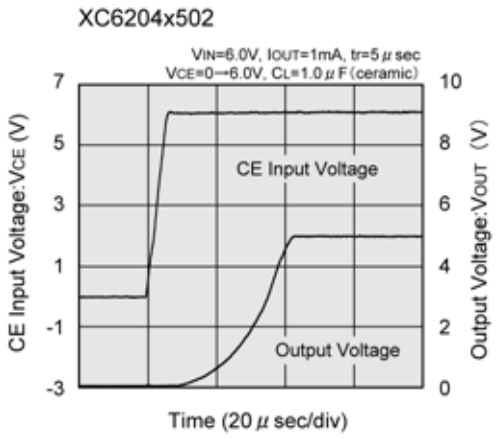

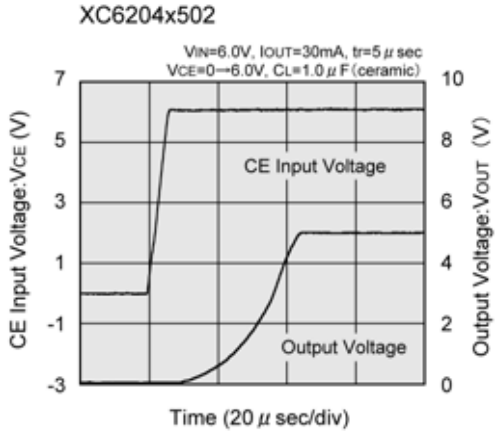

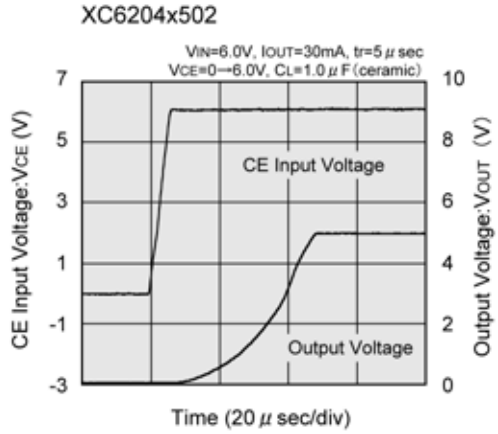

(12) Ripple Rejection Rate

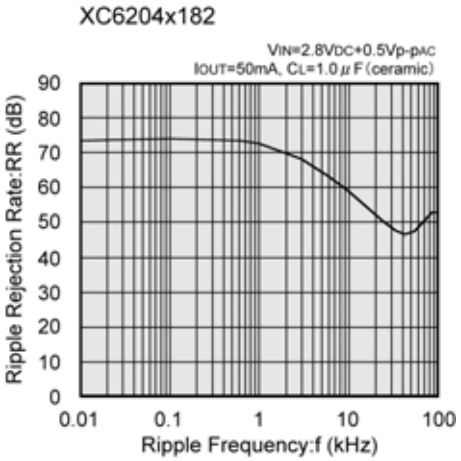

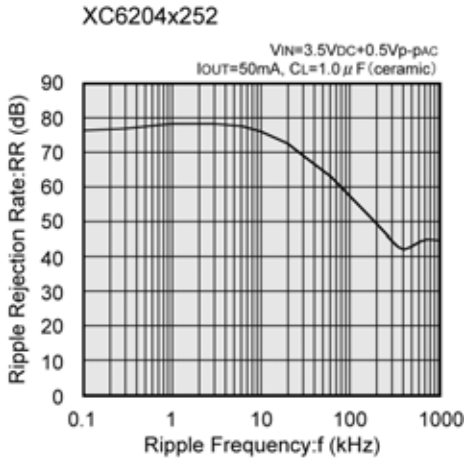

■TYPICAL PERFORMANCE CHARACTERISTICS (Continued)

●XC6204 (Continued)

(12) Ripple Rejection Rate (Continued)

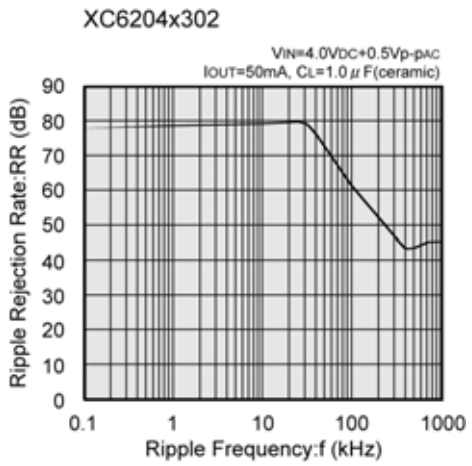

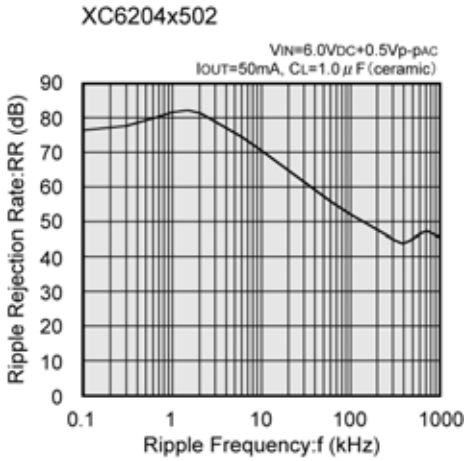

(13) Output Noise Density

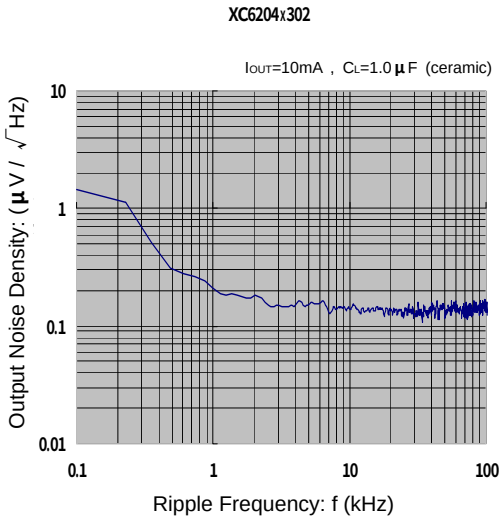

■TYPICAL PERFORMANCE CHARACTERISTICS (Continued)

●XC6205

(1) Output Voltage vs. Output Current

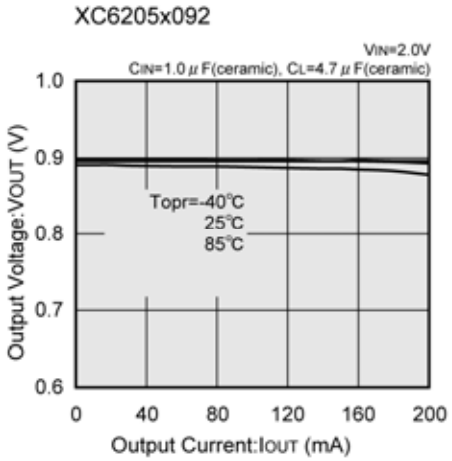

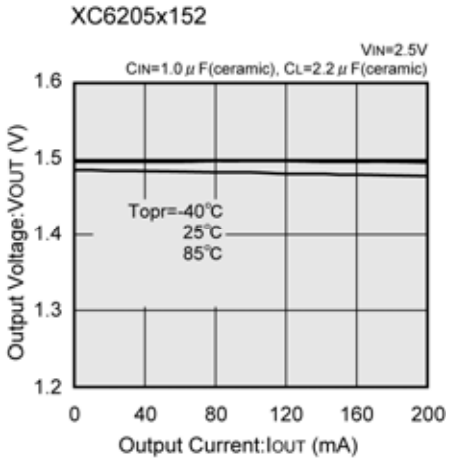

(2) Output Voltage vs. Output Current (Current Limit)

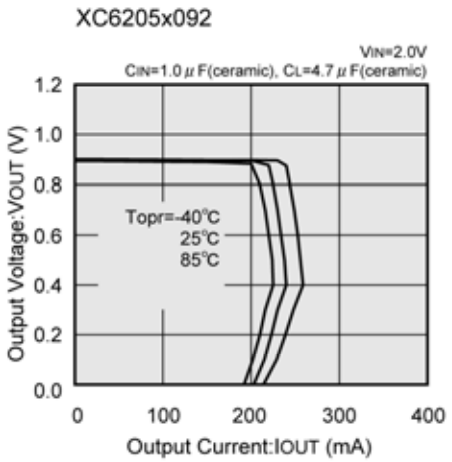

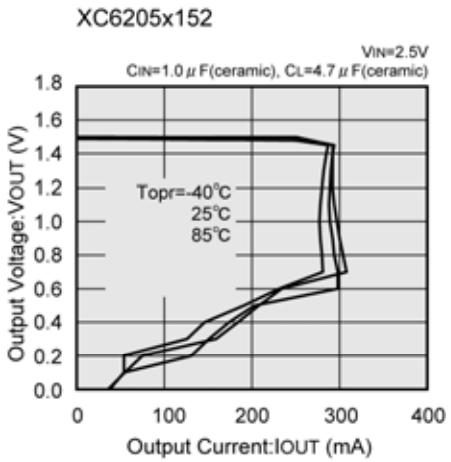

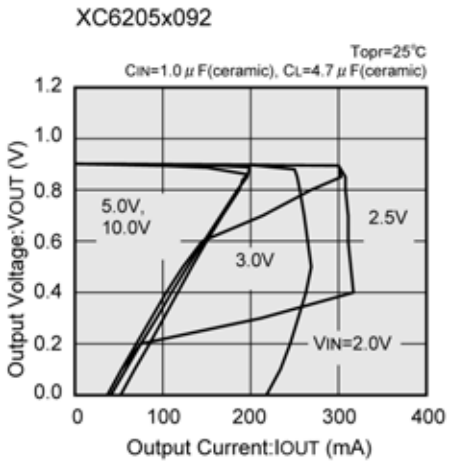

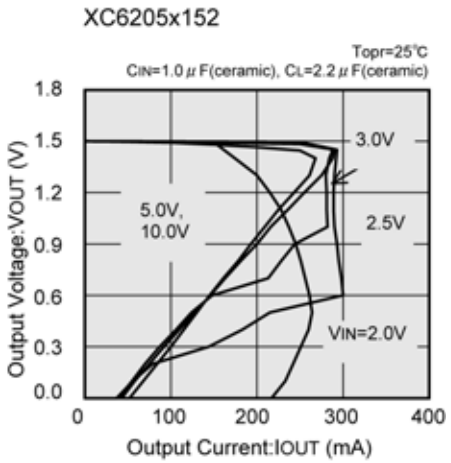

■TYPICAL PERFORMANCE CHARACTERISTICS (Continued)

●XC6205 (Continued)

(3) Output Voltage vs. Input Voltage

XC6205x092

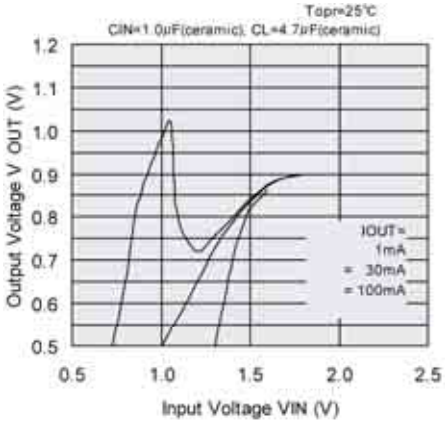

XC6205x092

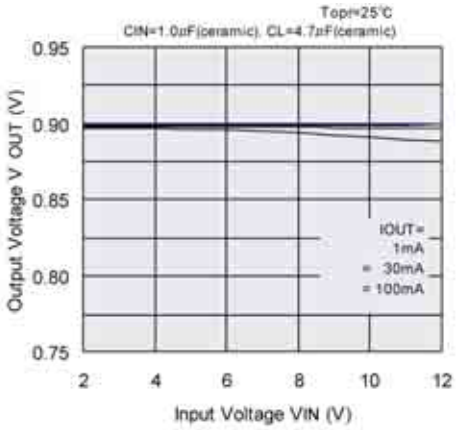

XC6205x152

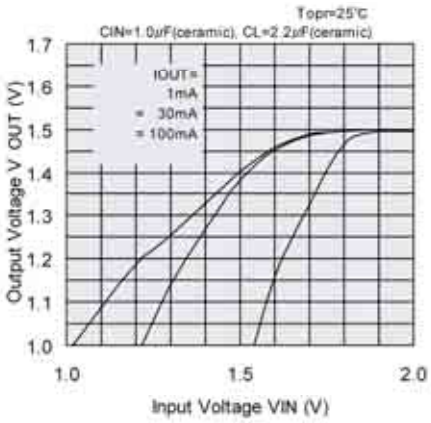

XC6205x152

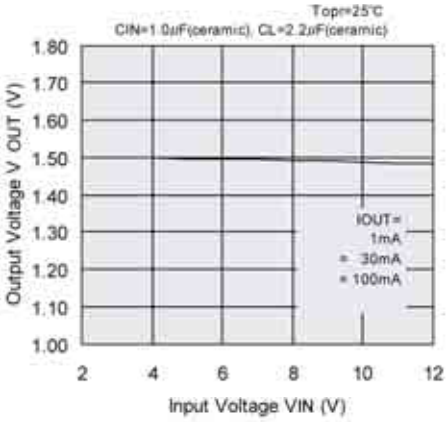

(4) Dropout Voltage VS. Output Current

XC6205x152

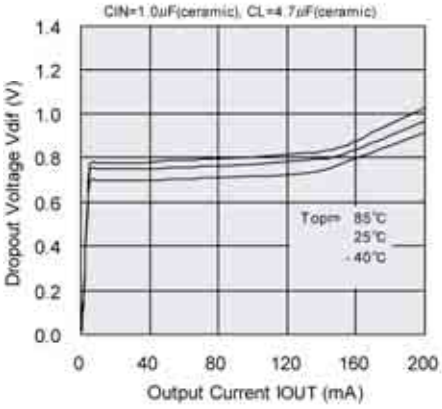

XC6205x152

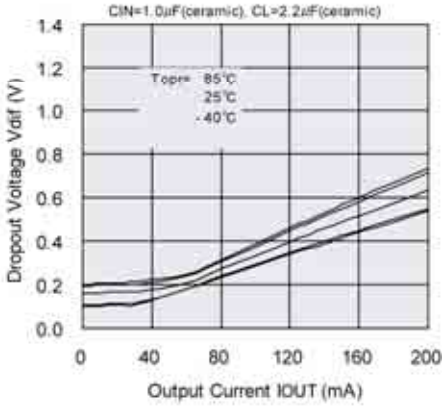

■TYPICAL PERFORMANCE CHARACTERISTICS (Continued)

●XC6205 (Continued)

(5) Supply Current vs. Input Voltage

XC6205x092

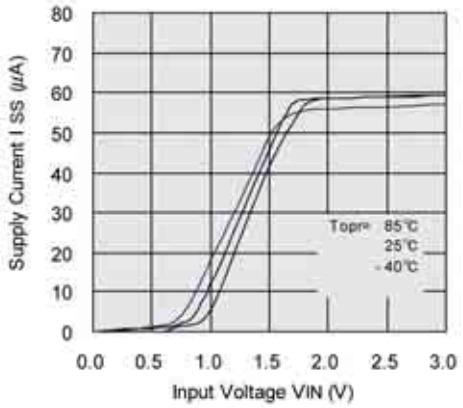

XC6205x092

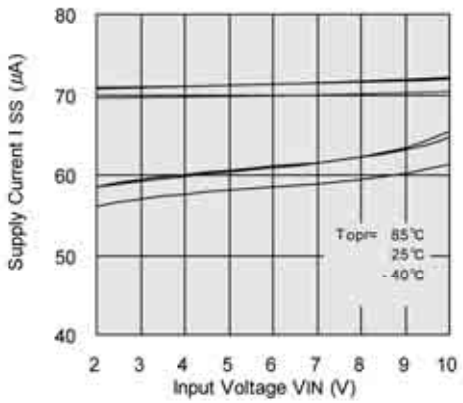

XC6205x152

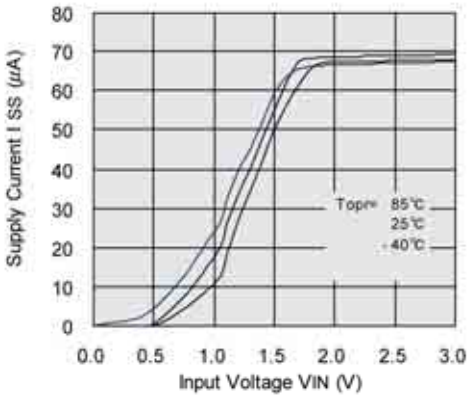

XC6205x152

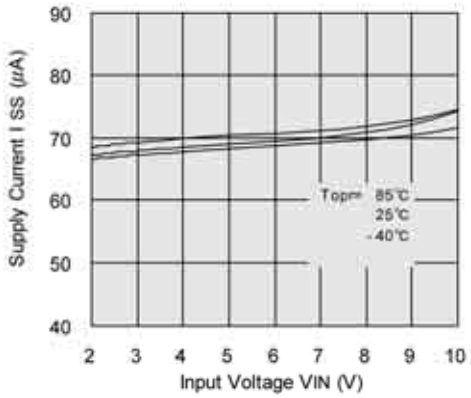

(6) Output Voltage vs. Ambient Temperature

XC6205x092

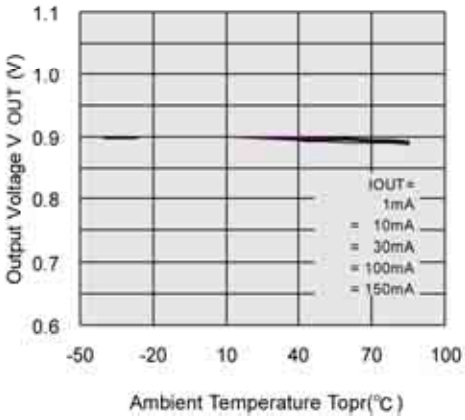

XC6205x152

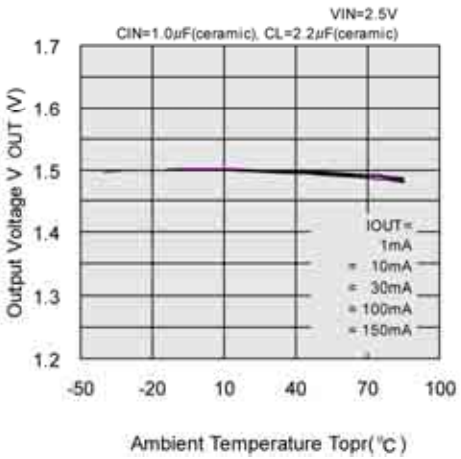

■TYPICAL PERFORMANCE CHARACTERISTICS (Continued)

●XC6205 (Continued)

(7) Supply Current vs. Ambient Temperature

XC6205x092

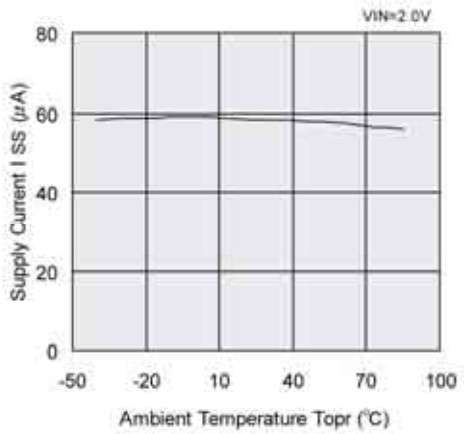

XC6205x152

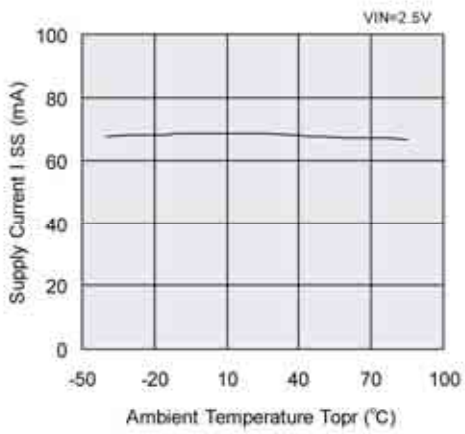

(8) CE Pin Threshold Voltage vs. Ambient Temperature

XC6205xxx2

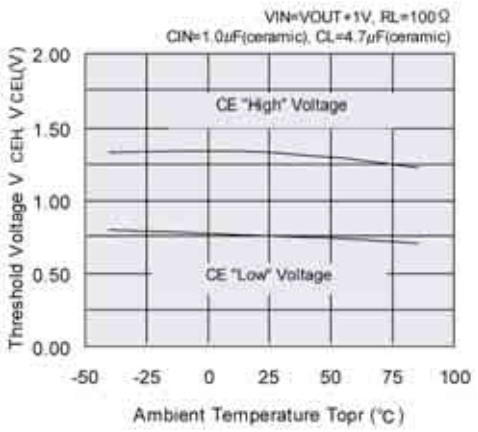

(9) Load Transient Response

XC6205x092

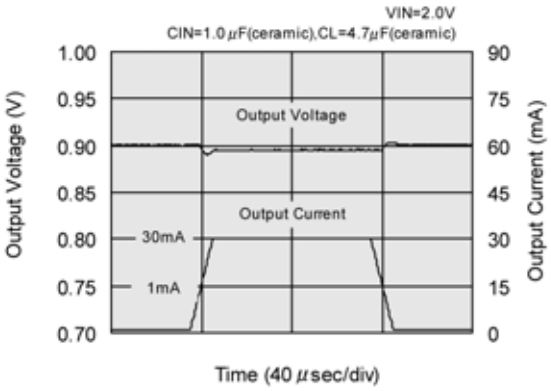

XC6205x092

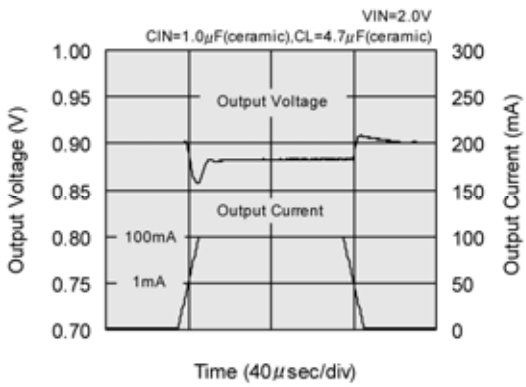

■TYPICAL PERFORMANCE CHARACTERISTICS (Continued)

●XC6205 (Continued)

(9) Load Transient Response (Continued)

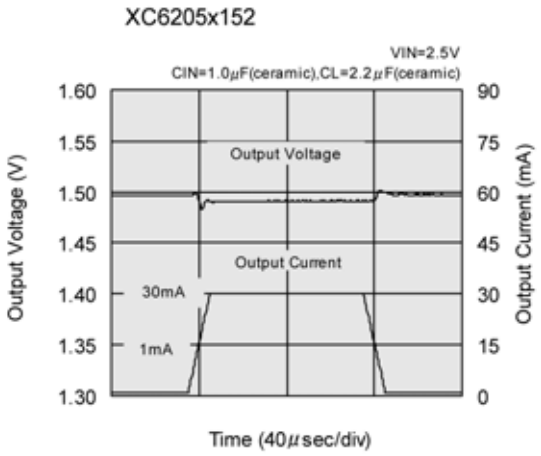

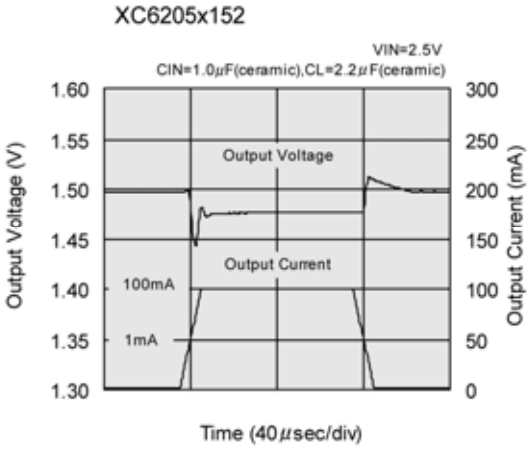

(10) Input Transient Response 1

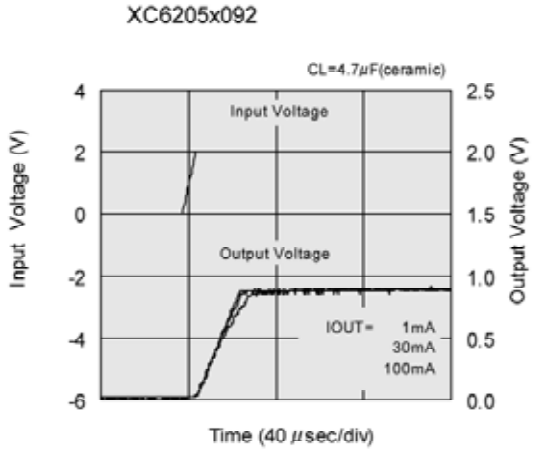

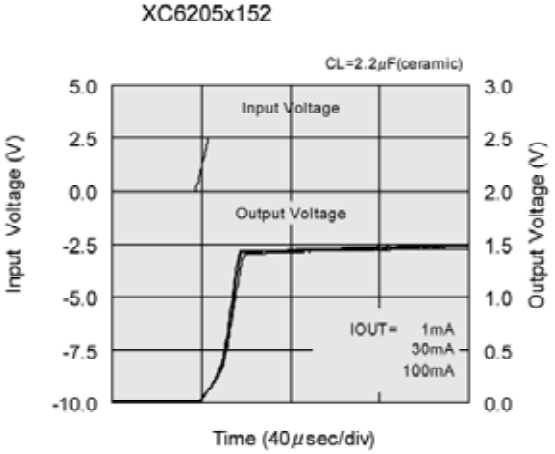

(11) Input Transient Response 2

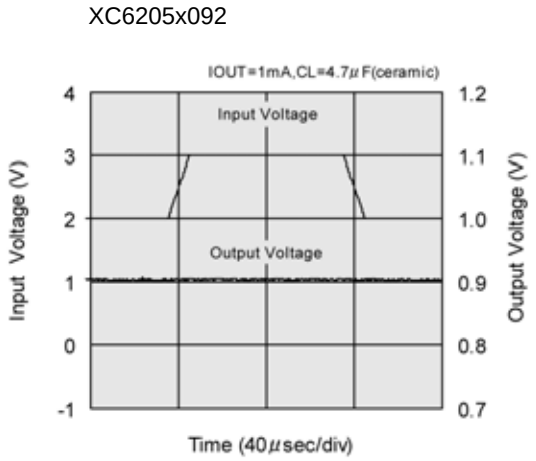

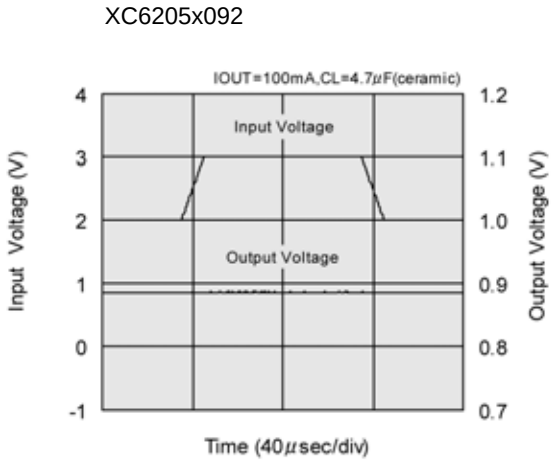

■TYPICAL PERFORMANCE CHARACTERISTICS (Continued)

●XC6205 (Continued)

(11) Input Transient Response 2 (Continued)

XC6205x152

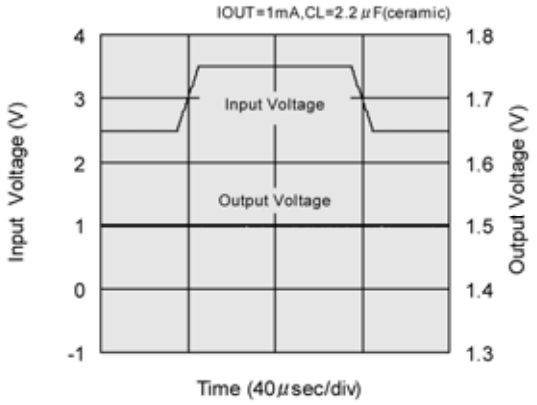

XC6205x152

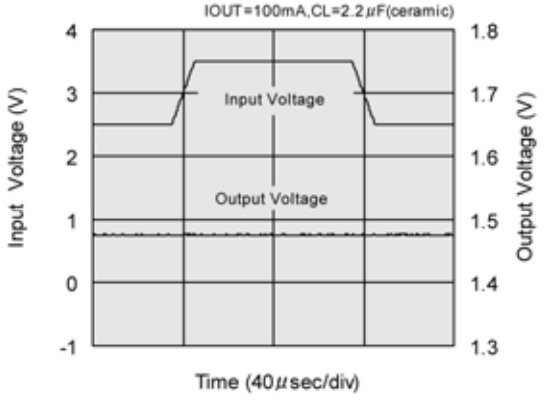

(12) Enable Response Time

XC6205B092

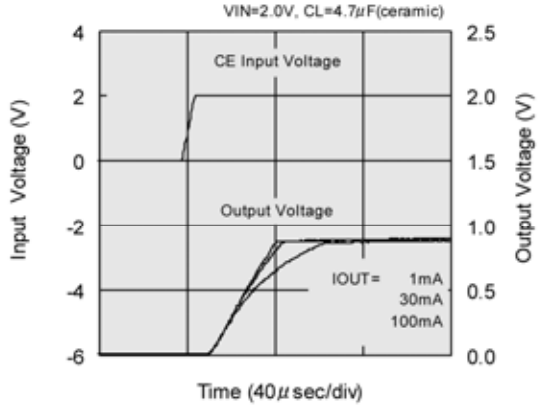

XC6205x152

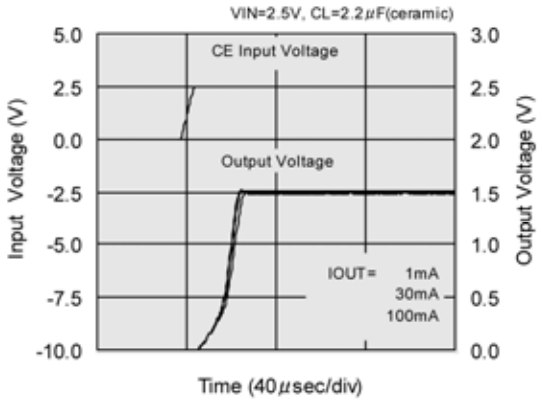

(13) Ripple Rejection Rate

XC6205x092

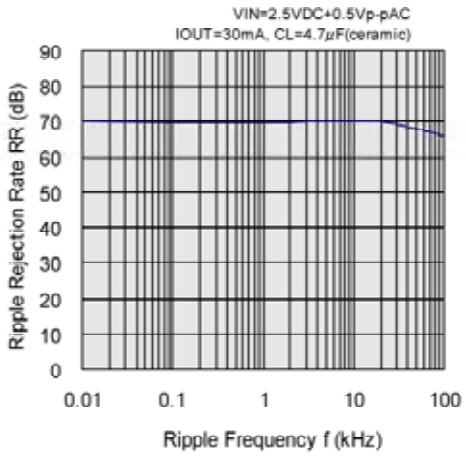

XC6205x152

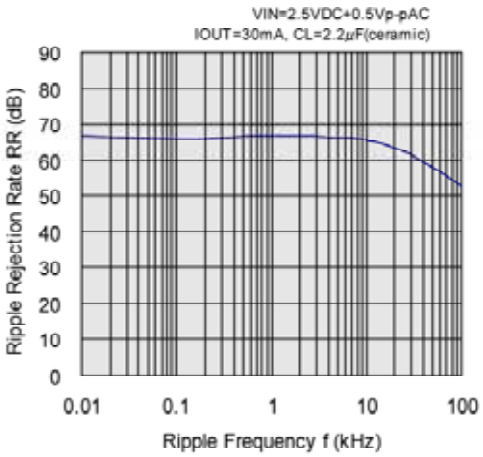

■PACKAGING INFORMATION

●SOT-25

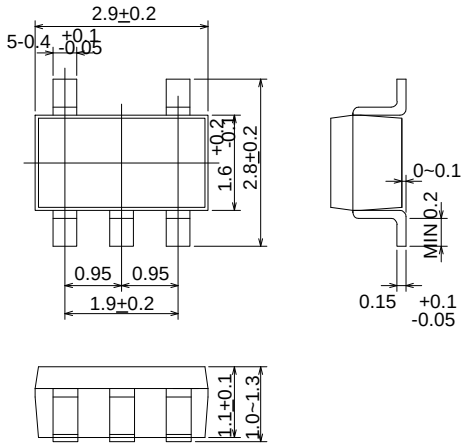

●SOT-89-5

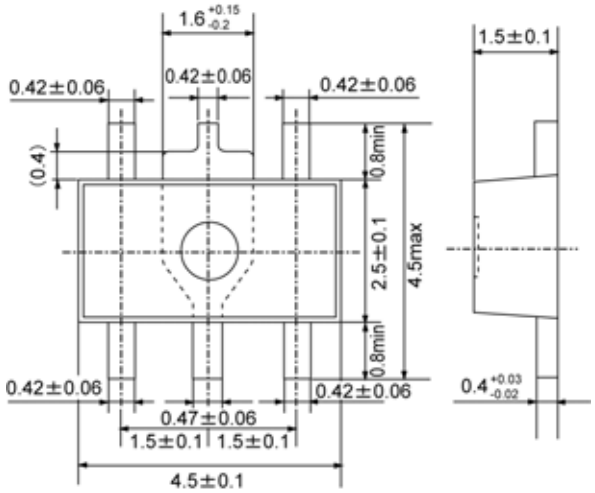

●USP-6B

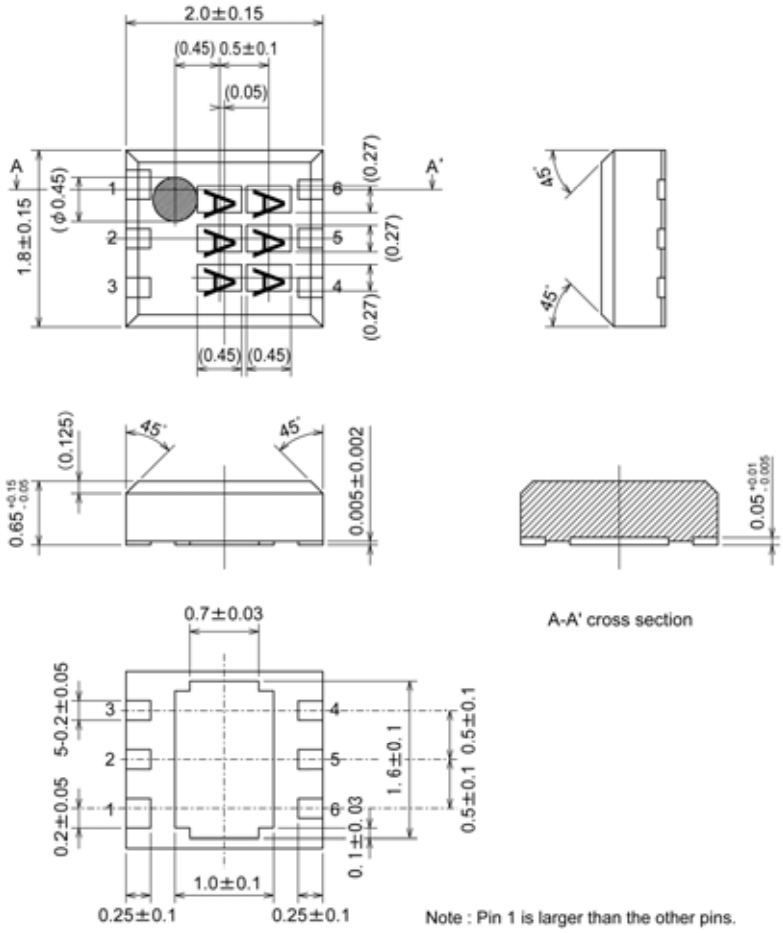

■PACKAGING INFORMATION (Continued)

●USP-6B Recommended Pattern Layout

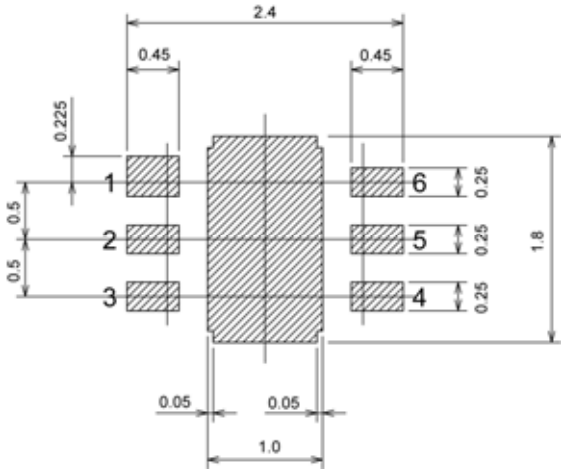

●USP-6B Recommended Metal Mask Design

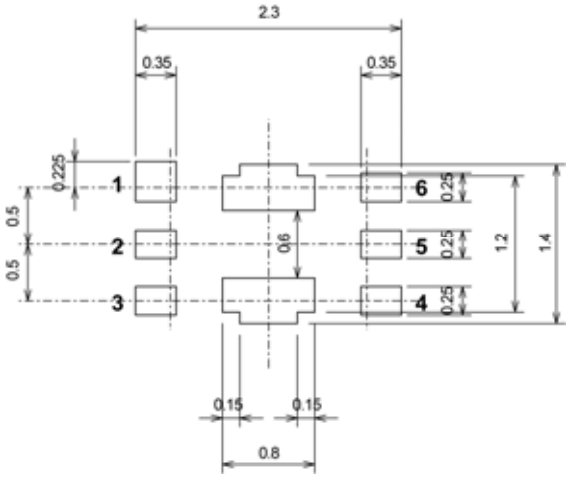

■MARKING RULE

[XC6204]

●SOT-25, SOT-89-5

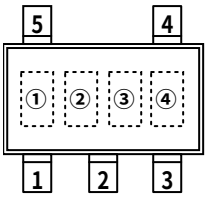

SOT-25
(TOP VIEW)

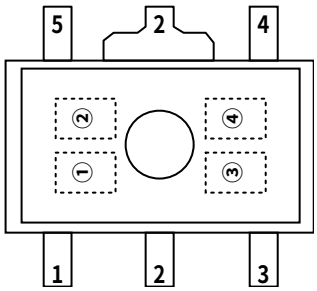

SOT-89-5
(TOP VIEW)

①Represents product series

MARK	PRODUCT SERIES
4	XC6204xxxxxx

②Represents type of regulator

MARK				PRODUCT SERIES
OUTPUT VOLTAGE 100mV INCREMENTS		OUTPUT VOLTAGE 50mV INCREMENTS		
VOLTAGE =0.1~3.0V	VOLTAGE =3.1~6.0V	VOLTAGE =0.15～3.05V	VOLTAGE =3.15～6.05V	
V	A	E	L	XC6204Axxxxx
X	B	F	M	XC6204Bxxxxx
Y	C	H	N	XC6204Cxxxxx
Z	D	K	P	XC6204Dxxxxx

③Represents output voltage

MARK	OUTPUT VOLTAGE (V)				MARK	OUTPUT VOLTAGE (V)			
0	–	3.1	–	3.15	F	1.6	4.6	1.65	4.65
1	–	3.2	–	3.25	H	1.7	4.7	1.75	4.75
2	–	3.3	–	3.35	K	1.8	4.8	1.85	4.85
3	–	3.4	–	3.45	L	1.9	4.9	1.95	4.95
4	–	3.5	–	3.55	M	2.0	5.0	2.05	5.05
5	–	3.6	–	3.65	N	2.1	5.1	2.15	5.15
6	–	3.7	–	3.75	P	2.2	5.2	2.25	5.25
7	–	3.8	–	3.85	R	2.3	5.3	2.35	5.35
8	–	3.9	–	3.95	S	2.4	5.4	2.45	5.45
9	–	4.0	–	4.05	T	2.5	5.5	2.55	5.55
A	–	4.1	–	4.15	U	2.6	5.6	2.65	5.65
B	–	4.2	–	4.25	V	2.7	5.7	2.75	5.75
C	–	4.3	–	4.35	X	2.8	5.8	2.85	5.85
D	–	4.4	–	4.45	Y	2.9	5.9	2.95	5.95
E	–	4.5	–	4.55	Z	3.0	6.0	3.05	6.05

④Represents production lot number
0～9, A to Z repeated. (G, I, J, O, Q, W excepted)

■MARKING RULE (Continued)

[XC6204]

●USP-6B

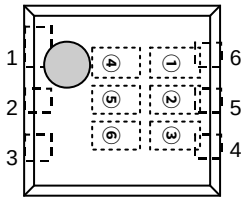

USP-6B
(TOP VIEW)

①②Represents product series

MARK		PRODUCT SERIES
①	②	
0	4	XC6204xxxxDx

③Represents type of regulator

MARK	TYPE	PRODUCT SERIES
A	CE pin, High Active, Pull-Down Resistor Built-In	XC6204AxxxDx
B	CE pin, High Active, No Pull-Down Resistor Built-In	XC6204BxxxDx
C	CE pin, High Active, Pull-Up Resistor Built-In	XC6204CxxxDx
D	CE pin, Low Active, No Pull-Up Resistor Built-In	XC6204DxxxDx

④Represents integer of the output voltage

MARK	VOLTAGE（V）	PRODUCT SERIES
3	3.X	XC6204x3xxDx
5	5.X	XC6204x5xxDx

⑤Represents decimal number of output voltage

MARK	VOLTAGE (V)	PRODUCT SERIES	MARK	VOLTAGE (V)	PRODUCT SERIES
0	X.0	XC6204xx0xDx	A	X.05	XC6204xx0ADx
1	X.1	XC6204xx1xDx	B	X.15	XC6204xx1ADx
2	X.2	XC6204xx2xDx	C	X.25	XC6204xx2ADx
3	X.3	XC6204xx3xDx	D	X.35	XC6204xx3ADx
4	X.4	XC6204xx4xDx	E	X.45	XC6204xx4ADx
5	X.5	XC6204xx5xDx	F	X.55	XC6204xx5ADx
6	X.6	XC6204xx6xDx	H	X.65	XC6204xx6ADx
7	X.7	XC6204xx7xDx	K	X.75	XC6204xx7ADx
8	X.8	XC6204xx8xDx	L	X.85	XC6204xx8ADx
9	X.9	XC6204xx9xDx	M	X.95	XC6204xx9ADx

⑥Represents production lot number
0 to 9, A to Z repeated. (G, I, J, O, Q, W excepted)
Note: No character inversion used.

■MARKING RULE (Continued)

[XC6205]

●SOT-25, SOT-89-5

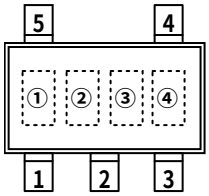

SOT-25
(TOP VIEW)

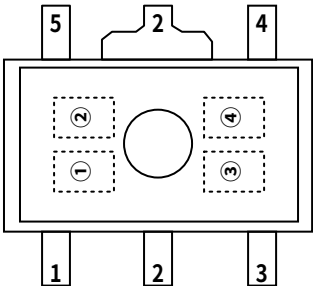

SOT-89-5
(TOP VIEW)

①Represents product series

MARK	PRODUCT SERIES
5	XC6205xxxxxx

②Represents type of regulator

MARK		PRODUCT SERIES
OUTPUT VOLTAGE 100mV INCREMENTS	OUTPUT VOLTAGE 50mV INCREMENTS	
V	E	XC6205Axxxxx
X	F	XC6205Bxxxxx
Y	H	XC6205Cxxxxx
Z	K	XC6205Dxxxxx

③Represents output voltage

MARK	OUTPUT VOLTAGE (V)		MARK	OUTPUT VOLTAGE (V)	
8	0.9	0.95	D	1.4	1.45
9	1.0	1.05	E	1.5	1.55
A	1.1	1.15	F	1.6	1.65
B	1.2	1.25	H	1.7	1.75
C	1.3	1.35			

④Represents production lot number
0 to 9, A to Z, reversed character of 0 to 9 and A to Z repeated. (G, I, J, O, Q, W excepted)

■MARKING RULE(Continued)

[XC6205]

●USP-6B

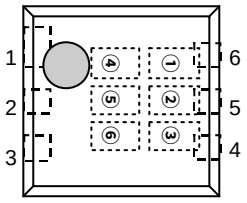

USP-6B
(TOP VIEW)

①②Represents product series

MARK		PRODUCT SERIES
①	②	
0	5	XC6205xxxxDx

③Represents type of voltage regulator

MARK	TYPE		PRODUCT SERIES
A	CE pin:	High Active with Pull-Down Resistor Built-In	XC6205AxxxDx
B	CE pin:	High Active with No Pull-Down Resistor Built-In	XC6205BxxxDx
C	CE pin:	Low Active with Pull-Up Resistor Built-In	XC6205CxxxDx
D	CE pin:	Low Active with No Pull-Up Resistor Built-In	XC6205DxxxDx

④Represents integer of output voltage

MARK	VOLTAGE (V)	PRODUCT SERIES
3	3.X	XC6205x3xxDx
5	5.X	XC6205x5xxDx

⑤Represents decimal point of output voltage

MARK	OUTPUT VOLTAGE (V)		MARK	OUTPUT VOLTAGE (V)	
0	X.0	XC6205xx0xDx	A	X.05	XC6205xx0ADx
1	X.1	XC6205xx1xDx	B	X.15	XC6205xx1ADx
2	X.2	XC6205xx2xDx	C	X.25	XC6205xx2ADx
3	X.3	XC6205xx3xDx	D	X.35	XC6205xx3ADx
4	X.4	XC6205xx4xDx	E	X.45	XC6205xx4ADx
5	X.5	XC6205xx5xDx	F	X.55	XC6205xx5ADx
6	X.6	XC6205xx6xDx	H	X.65	XC6205xx6ADx
7	X.7	XC6205xx7xDx	K	X.75	XC6205xx7ADx
8	X.8	XC6205xx8xDx	L	X.85	XC6205xx8ADx
9	X.9	XC6205xx8xDx	M	X.95	XC6205xx9ADx

⑥Represents production lot number
0 to 9, A to Z repeated (G, I, J, O, Q, W excepted)
*No character inversion used.

1. The products and product specifications contained herein are subject to change without notice to improve performance characteristics. Consult us, or our representatives before use, to confirm that the information in this datasheet is up to date.
2. We assume no responsibility for any infringement of patents, patent rights, or other rights arising from the use of any information and circuitry in this datasheet.
3. Please ensure suitable shipping controls (including fail-safe designs and aging protection) are in force for equipment employing products listed in this datasheet.
4. The products in this datasheet are not developed, designed, or approved for use with such equipment whose failure of malfunction can be reasonably expected to directly endanger the life of, or cause significant injury to, the user.
   (e.g. Atomic energy; aerospace; transport; combustion and associated safety equipment thereof.)
5. Please use the products listed in this datasheet within the specified ranges.
   Should you wish to use the products under conditions exceeding the specifications, please consult us or our representatives.
6. We assume no responsibility for damage or loss due to abnormal use.
7. All rights reserved. No part of this datasheet may be copied or reproduced without the prior permission of TOREX SEMICONDUCTOR LTD.

TOREX SEMICONDUCTOR LTD.